ALTO-SHAAM

Hot Food Holding
Drop-In Wells
Electric

500-HWI/D4

100-HW/D6

300-HWI/D6

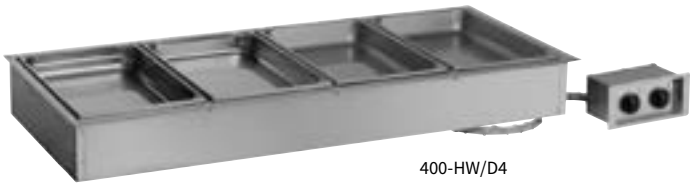

400-HW/D4

200-HWIS/D6

Models:

100-HW/D4/D6/D443/D643
100-HWLF/D4/D6
200-HW/D4/D6/D443/D643
200-HWLF/D4/D6
200-HWI/D4/D6/D443/D643
200-HWIS/D6
200-HWILF/D4/D6
300-HW/D4/D6/D443/D643
300-HWLF/D4/D6
300-HWI/D4/D6/D443/D643
300-HWIS/D6
300-HWILF/D4/D6
400-HW/D4/D6
400-HWLF/D4/D6
400-HWI/D4/D6
400-HWILF/D4/D6
500-HW/D4/D6
500-HWLF/D4/D6
500-HWI/D4/D6
500-HWILF/D4/D6

- **Installation**
- **Operation**
- **Maintenance**

W164 N9221 Water Street • P.O. Box 450
Menomonee Falls, Wisconsin 53052-0450 U.S.A.

PHONE: 262.251.3800 • 800.558.8744 U.S.A. / CANADA
FAX: 262.251.7067 • 800.329.8744 U.S.A. ONLY
www.alto-shaam.com

Consult instructions for operation and use.

24•7 Your Service Hotline 1-800-558-8744

HALO HEAT®

Printed in U.S.A.

MN-37234 (Rev. 5) • 07/18

Table of Contents

Warranty and Service Information 3
Delivery 4
Transportation and Damage Claims 5
Unpacking 6
Safety Procedures 7
Installation 9
Dimensions 11
Electrical Connections 29
Operating Instructions 31
General Holding Guidelines 32
Cleaning and Preventative Maintenance 33
Food Safety 35
Service 36
Wiring Diagrams - Always refer to the wire diagram(s) included with the appliance for most current version.
Limited Warranty . . . . . back cover

Enjoy your Alto-Shaam Hot Well!

Halo Heat® Technology Better food quality. Individual well control. Inside Alto-Shaam drop-in food wells, gentle Halo Heat® surrounds each well with precisely controlled, even heat. Water-less design offers safety and less maintenance. Drop-in wells easily fit into any buffet service counter, prep station, or chef's table.

Register your Appliance

Register Registering your appliance ensures prompt service in the event of a warranty claim. You will also receive direct notifications of software updates and additional product information.

Your personal information will not be shared with any other company.

www.alto-shaam.com/warranty

Alto-Shaam 24/7 Emergency Repair Service

Call Call 800-558-8744 to reach our 24-hour emergency service call center for immediate access to local authorized service agencies outside standard business hours. The emergency service access is provided exclusively for Alto-Shaam equipment and is available throughout the United States through Alto-Shaam's toll free number.

Availability Emergency service access is available seven days a week, including holidays.

Delivery

This Alto-Shaam appliance has been thoroughly tested and inspected to ensure only the highest quality appliance is provided. Upon receipt, check for any possible shipping damage and report it at once to the delivering carrier. See Transportation Damage and Claims section located in this manual.

This appliance, including unattached items and accessories, may be delivered in one or more packages. Ensure all standard items and options have been received with each appliance as ordered. Save all the information packed with the appliance. Register the appliance online at *www.alto-shaam.com/en/support/warranty-registration* to ensure prompt service in the event of a warranty parts and labor claim.

This manual must be read and understood by all people using or installing the appliance. Contact the Alto-Shaam Tech Team Service Department if you have any questions concerning installation, operation, or maintenance.

1-800-558-8744; servicedept@alto-shaam.com

The serial number is required for all inquiries.

Always include both model and serial number(s) in any correspondence regarding the appliance.

Model: _____

Serial number: _____

Purchased from: _____

Date installed: _____ **Voltage:** _____

⚠CAUTION

Appliance and accessories may be heavy. To prevent serious injury, **always** use a sufficient number of trained and experienced workers when moving or leveling appliance and handling accessories.

Environmental Conditions

Operational Environmental Conditions

- Before use, appliance must acclimate to room temperature in the environment it is placed — 24 hours is recommended.
- Ambient temperature range of 60°F to 110°F (16°C to 43°C).
- Relative humidity of less than 95% non-condensation.
- Atmospheric pressure range of 50kPa to 106kPa.

Transportation and Damage Claims

All Alto-Shaam equipment is sold Free on Board (F.O.B.) shipping point, and when accepted by the carrier, such shipments become the property of the consignee.

Should damage occur in shipment, do not put the appliance into service until the damage has been inspected by an authorized Alto-Shaam service provider.

Shipping damages are a matter between the carrier and the consignee. In such cases, the carrier is assumed to be responsible for the safe delivery of the merchandise, unless negligence can be established on the part of the shipper.

1. Make an immediate inspection while the appliance is still in the truck or immediately after it is moved to the receiving area. Do not wait until after the appliance is moved to a storage area.
2. Do not sign a delivery receipt or a freight bill until a proper count has been made and inspection of all appliances are received.
3. Note all damage to packages directly on the carrier's delivery receipt.
4. Make certain the driver signs the delivery receipt. If the driver refuses to sign, make a notation of this refusal on the receipt.
5. If the driver refuses to allow inspection, write the following on the delivery receipt: **Driver refuses to allow inspection of containers for visible damage.**
6. Contact the carrier's office immediately upon finding damage, and request an inspection. Mail a written confirmation to the carrier's office with the time, date, and the person called.
7. Save any packages and packing material for further inspection by the carrier.
8. Promptly file a written claim with the carrier and attach copies of all supporting paperwork.

Alto-Shaam will continue our policy of assisting our customers in collecting claims which have been properly filed and actively pursued. Alto-Shaam cannot, however, file any damage claims, assume the responsibility of any claims, or accept deductions in payment for such claims.

Record the model and serial number of the appliance for easy reference. Always refer to both model and serial number in any contact with Alto-Shaam regarding this appliance.

Model: _____

Serial Number: _____

Date Installed: _____

Voltage: _____

Purchased From: _____

_____

_____

Alto-Shaam has established a twenty-four hour emergency service call center to offer immediate customer access to a local authorized service agency outside of standard business hours. The emergency service access is provided exclusively for Alto-Shaam equipment and is available throughout the United States through the use of Alto-Shaam's toll-free number. Emergency service access is available seven days a week including holidays.

Unpacking

- Carefully remove the appliance from the carton or crate.

  NOTE: Do not discard the carton and other packaging material until you have inspected the appliance for hidden damage and tested it for proper operation.

  Do not discard this manual. This manual is considered to be part of the appliance and is to be provided to the owner or manager of the business or to the person responsible for training operators. Additional manuals are available from the manufacturer.

- Read all instructions in this manual carefully before installing this appliance, using the appliance or performing routine maintenance. Following procedures other than those indicated in this guide to use and clean the appliance is considered inappropriate and may cause damage, injury or fatal accidents, in addition to voiding the warranty and relieving Alto-Shaam of all liability.
- Remove all protective plastic film, packaging materials, and accessories from the appliance before connecting electrical power. Store any accessories in a convenient place for future use.

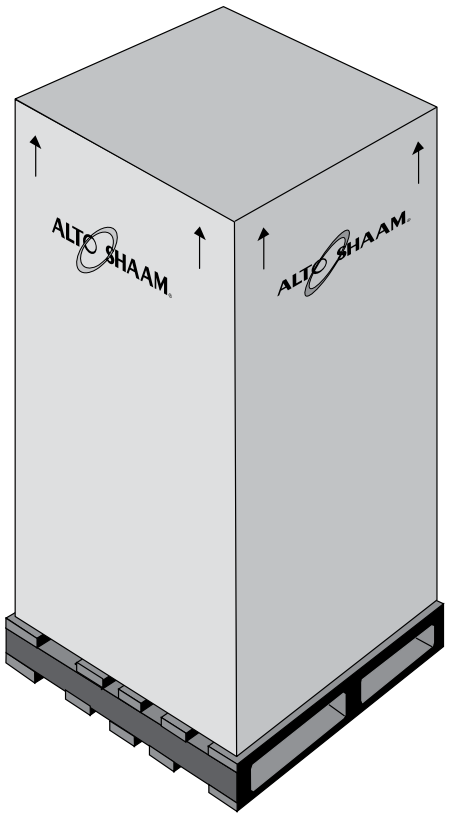

- The appliance is intended to cook, hold or process foods for the purpose of human consumption. No other use for this appliance is authorized and is therefore considered dangerous. The appliance must not be used to cook food containing flammable materials (such as food with alcohol). Substances with a low flash point can ignite spontaneously and cause a fire.
- The appliance is intended for use in commercial establishments where all operators are familiar with the purpose, limitations, and associated hazards of this appliance. Operating instructions and warnings must be read and understood by all operators and users. Alto-Shaam recommends regular staff training to avoid the risk of accident or damage to the appliance. Operators must also receive regular safety instructions.
- Any troubleshooting guides, component views, and parts lists included in this manual are for general reference only and are intended for use by qualified and trained technicians.
- This manual should be considered a permanent part of this appliance. This manual and all supplied instructions, diagrams, schematics, parts lists, notices, and labels must remain with the appliance if the item is sold or moved to another location.

NOTICE: For equipment delivered for use in any location regulated by the following directive: 2012/95/EC WEEE

Do not dispose of electrical or electronic equipment with other municipal waste.

Knowledge of proper procedures is essential to the safe operation of electrically and/or gas energized equipment. The following signal words and symbols may be used throughout this manual.

⚠ DANGER

Indicates a hazardous situation that, if not avoided, will result in death or serious injury.

⚠ WARNING

Indicates a hazardous situation that, if not avoided, could result in death or serious injury.

⚠ CAUTION

Indicates a hazardous situation that, if not avoided, could result in minor or moderate injury.

NOTICE: Indicates information considered important, but not hazard-related (e.g., messages relating to property damage).

Indicates that referral to operating instructions is recommended to understand operation of equipment.

Safety Procedures

- To prevent serious injury, death or property damage, the appliance should be inspected and serviced at least every twelve (12) months by an authorized service partner or trained technician.
- **Only** allow an authorized service partner or trained technician to service or to repair the appliance. Installation or repairs that are not performed by an authorized service partner or trained technician, or the use of non-factory authorized parts will void the warranty and relieve Alto-Shaam of all liability.
- When working on this appliance, observe precautions in the literature, on tags, on labels attached to or shipped with the appliance and other safety precautions that may apply.

⚠WARNING

To prevent **serious personal injury**, **death**, or **property damage**:

The appliance must be cleaned thoroughly to avoid deposits of grease and or food residue inside the appliance that may catch fire. If fat deposits and/or food waste inside the appliance ignite, shut down the appliance immediately and keep the appliance door closed to extinguish the fire. If further extinguishing is required, disconnect the appliance from the main power and call the fire department. Failure to clean the appliance properly voids the warranty and relieves Alto-Shaam of all liability.

⚠WARNING

This appliance is not intended for use by persons (including children) with reduced physical, sensory or mental capabilities, or lack of experience and knowledge, unless they have been given supervision concerning use of the appliance by person responsible for their safety.

Children should be supervised to ensure that they do not play with the appliance.

⚠ WARNING

Improper installation, alteration, adjustment, service, cleaning, or maintenance could result in property damage, severe injury, or death.

Read and understand the installation, operating and maintenance instructions thoroughly before installing, servicing, or operating this equipment.

⚠ CAUTION

Appliance and accessories may be heavy. To prevent serious injury, **always** use a sufficient number of trained and experienced workers when moving or leveling appliance and handling accessories.

⚠ CAUTION

To prevent **personal injury** or **property damage**:

Always use hand protection when operating this appliance to avoid burns. Metal parts of this equipment become extremely hot when in operation.

⚠ WARNING

To prevent personal injury, death or property damage:

Do not store or use gasoline or other flammable vapors or liquids in the vicinity of this or any other appliance.

Site Installation

The Alto-Shaam hot well must be installed in a location that will permit it to function for its intended purpose and to allow adequate clearance for ventilation, proper cleaning, and maintenance access.

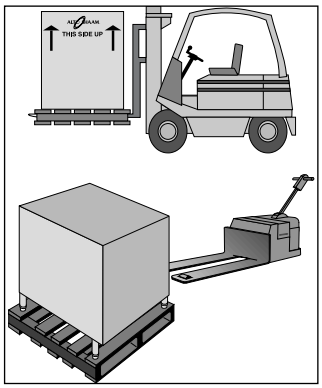

1. The hot well must be installed on a stable and level surface free of vibration and suitably strong enough to support the combined weights of the appliance plus the maximum product load weight.
2. **DO NOT** install this hot well in any area where it may be affected by any adverse conditions such as steam, grease, dripping water, high temperatures, or any other severely adverse conditions.
3. **DO NOT** store or use any flammable liquids or allow flammable vapors in the vicinity of this oven or any other appliance.
4. This hot well must be kept free and clear of any combustible materials.
5. Countertop material must withstand temperature up to 200°F (93°C). Verify countertop material temperature rating with manufacturer before installing to ensure counter can withstand heat.
6. A stainless steel heat shield is recommended if the area under the hot well is used for storage.
7. Some foods may require additional overhead heating. Always monitor the food temperature and add overhead heating when needed.

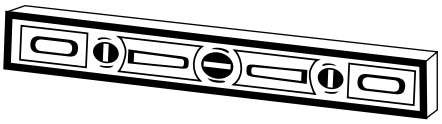

LEVELING

The hot well should be leveled before the electrical supply is connected. Level the appliance from side-to-side and front-to-back with the use of a spirit level. For appliances installed on a mobile stand, it is important that the floor surface be level due to the probability of frequent repositioning.

NOTICE: It is important to apply a food grade silicone underneath the decor flange to seal flange to the countertop.

Clearance Requirements
1" (25mm) from combustible surfaces

Accessories	
Pan Divider Bars	
Full Size (HW, HWLF)	16019
Half Size / Third-Size	11318
Extra Long (200 AND 300-HW/D443 OR D643)	1012405
Locking Kit	5020849
Undermount Kit (100-HW only)	5020793

Net Weights

Model	D4	D6	D443	D643
100-HW	25 lb (11 kg)	29 lb (13 kg)	31 lb (14 kg)	35 lb (16 kg)
100-HWLF	27 lb (12 kg)	31 lb (14 kg)	—	—
200-HW	40 lb (18 kg)	45.5 lb (21 kg)	50 lb (23 kg)	56 lb (25 kg)
200-HWLF	43 lb (20 kg)	48 lb (22 kg)	—	—
200-HWI	50 lb (23 kg)	56.25 lb (26 kg)	62 lb (28 kg)	69.5 lb (32 kg)
200-HWILF	54.25 lb (25 kg)	60.5 lb (27 kg)	—	—
200-HWIS	—	56.25 lb (26 kg)	—	—
300-HW	54.5 lb (25 kg)	61 lb (28 kg)	68 lb (31 kg)	75 lb (34 kg)
300-HWLF	58 lb (26 kg)	64.5 lb (29 kg)	—	—
300-HWI	69 lb (31 kg)	77.5 lb (35 kg)	85 lb (39 kg)	99 lb (45 kg)
300-HWILF	74 lb (34 kg)	83 lb (38 kg)	—	—
300-HWIS	—	77.5 lb (35 kg)	—	—
400-HW	71 lb (32 kg)	79 lb (36 kg)	—	—
400-HWLF	75 lb (34 kg)	83 lb (38 kg)	—	—
400-HWI	90 lb (41 kg)	101.5 lb (46 kg)	—	—
400-HWILF	96.5 lb (44 kg)	108 lb (49 kg)	—	—
500-HW	85 lb (39 kg)	94.5 lb (43 kg)	—	—
500-HWLF	89.5 lb (41 kg)	100 lb (45 kg)	—	—
500-HWI	107 lb (49 kg)	121 lb (55 kg)	—	—
500-HWILF	115 lb (52 kg)	128.5 lb (58 kg)	—	—

Product\Pan Capacity

Model	Max. Capacity			Max. Volume			Full-Size Pans* 12" x 20" x 4" GN 1/1 (530 x 325 x 100mm)	Half-Size Pans* 12" x 10" x 4" GN 1/2 (265 x 325 x 100mm)	Third-Size Pans* 12" x 6" x 4" GN 1/3 (176 x 325 x 100mm)	
	D4	D443	D6	D4	D443	D6			D4, D6	D443
100 Series	24 lb (11 kg)	32 lb (15 kg)	36 lb (16 kg)	14.5 qt (14 L)	19.2 qt (18 L)	22 qt (21 L)	1	2	3	4
200 Series	48 lb (22 kg)	64 lb (29 kg)	72 lb (33 kg)	29 qt (28 L)	37.8 qt (36 L)	44 qt (42 L)	2	4	6	8
300 Series	72 lb (33 kg)	96 lb (44 kg)	108 lb (49 kg)	43.5 qt (42 L)	56.6 qt (53 L)	66 qt (63 L)	3	6	9	12
400 Series	96 lb (44 kg)	—	144 lb (65 kg)	58 qt (56 L)	—	88 qt (84 L)	4	8	12	—
500 Series	120 lb (54 kg)	—	180 lb (82 kg)	72.5 qt (70 L)	—	110 qt (105 L)	5	10	15	—

*Based on 4" deep pans. Well will also accept 2-1/2" (65mm) deep pans; D6 Hot Wells will accept 6" (150mm) deep pans

100-HW

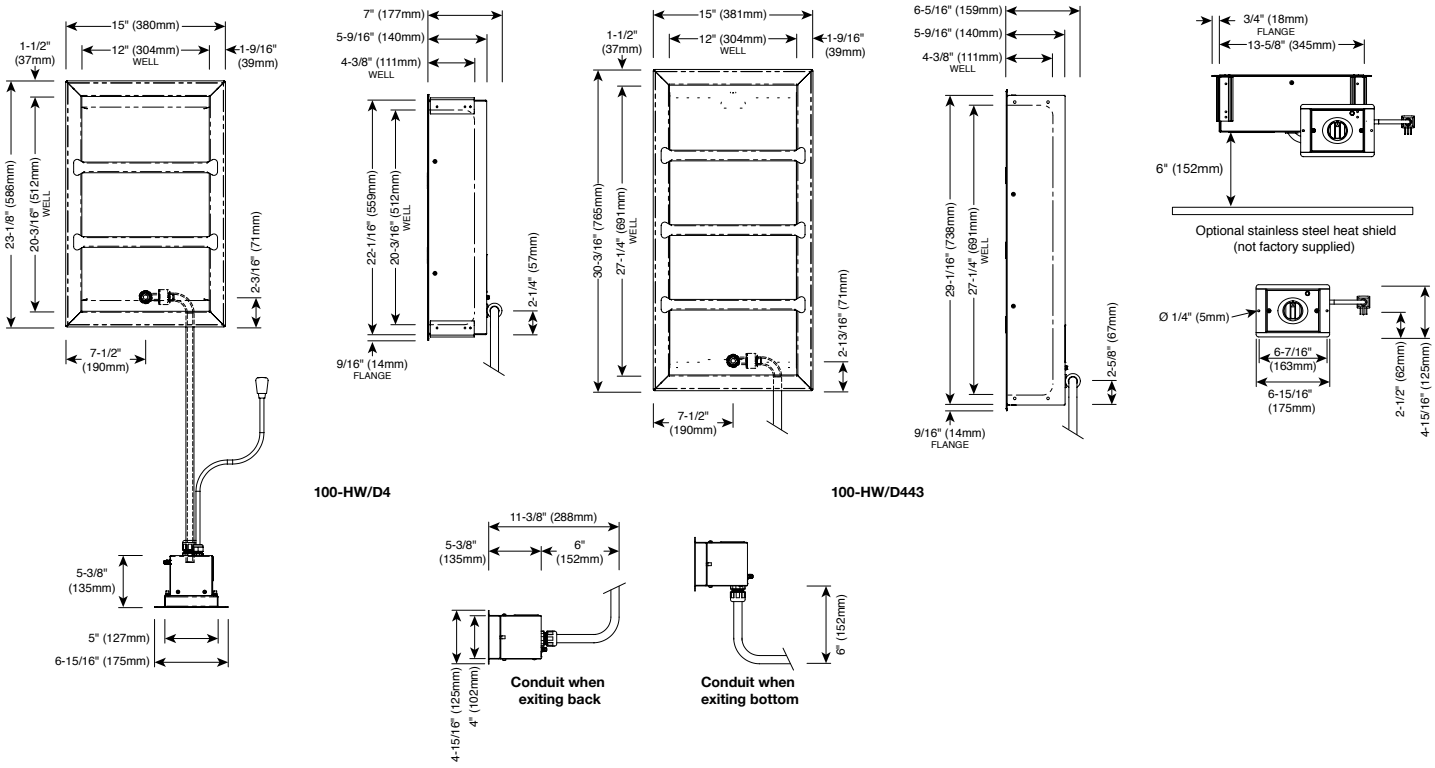

100-HWLF

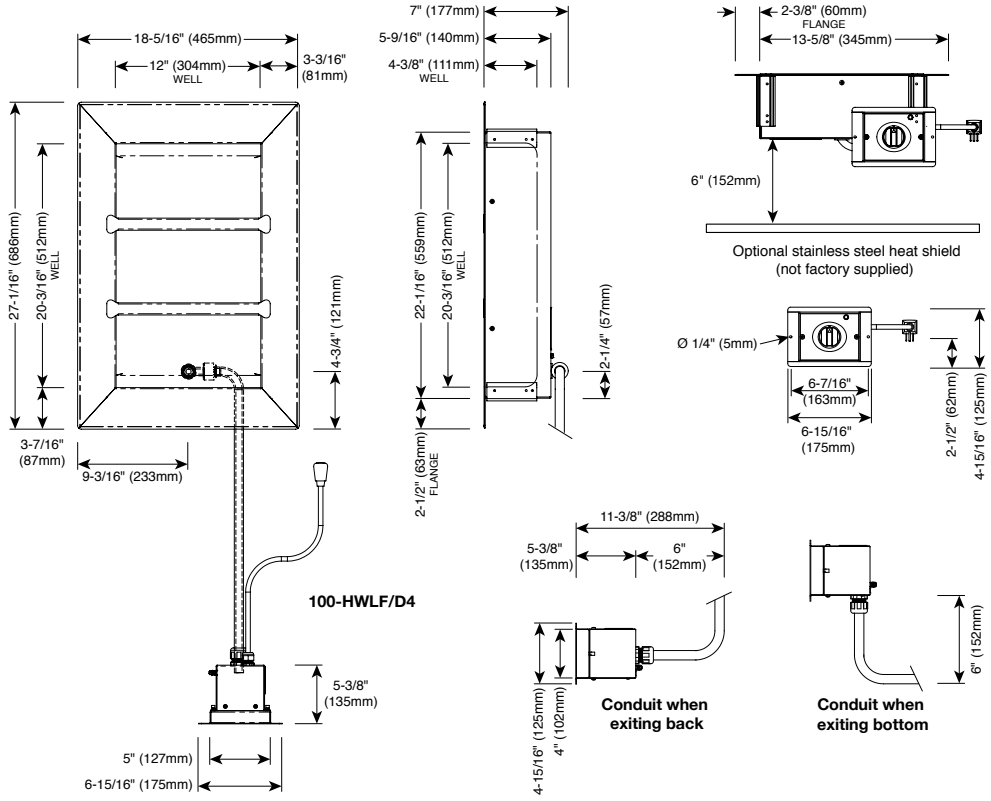

200-HW

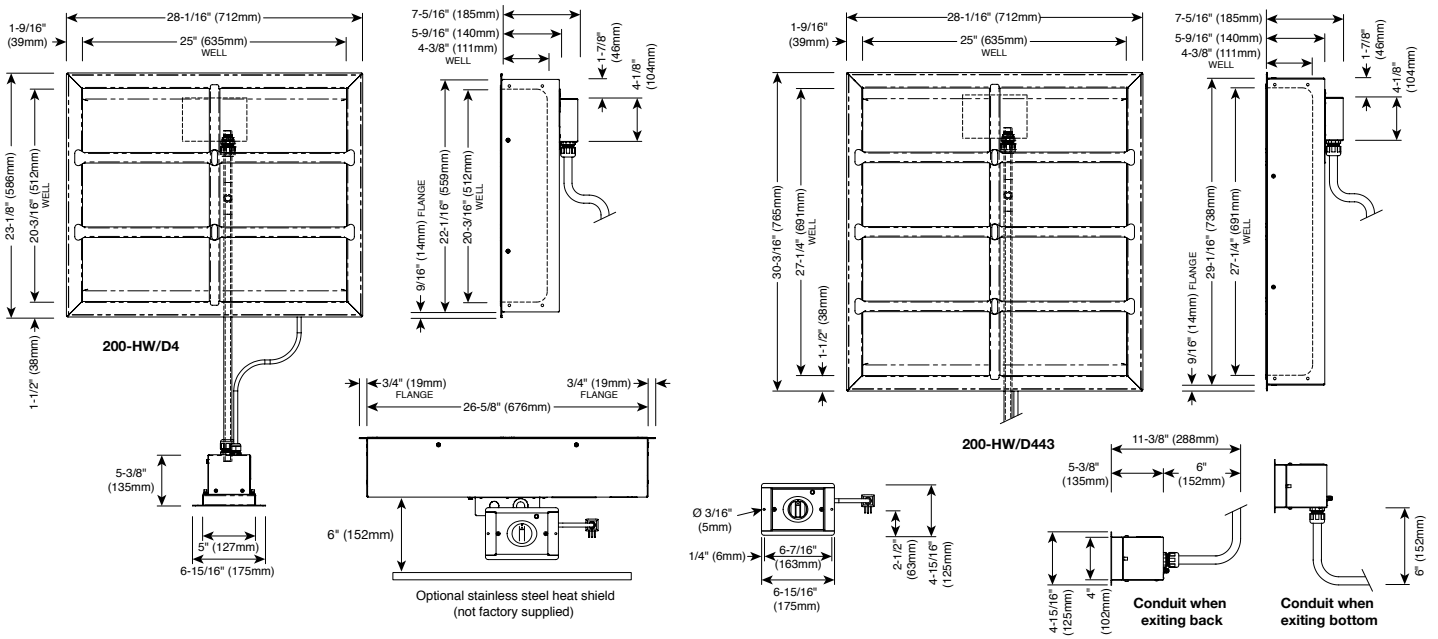

200-HWLF

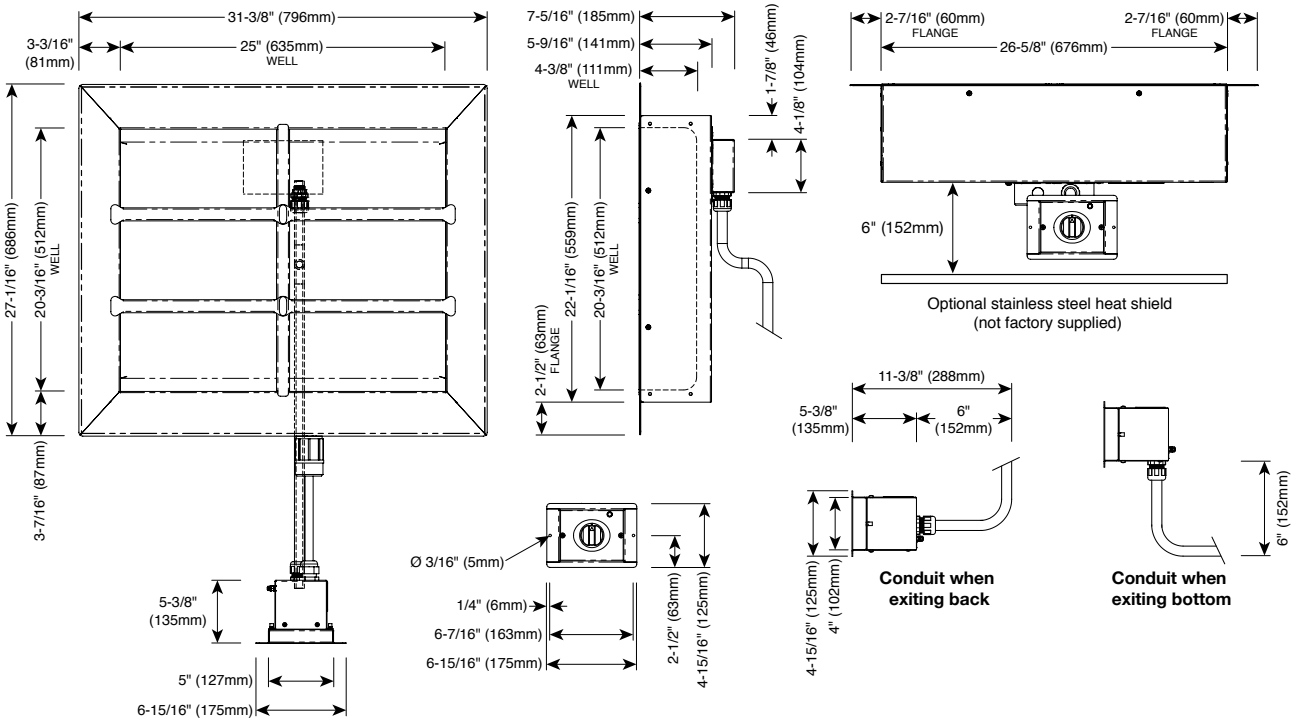

200-HWI

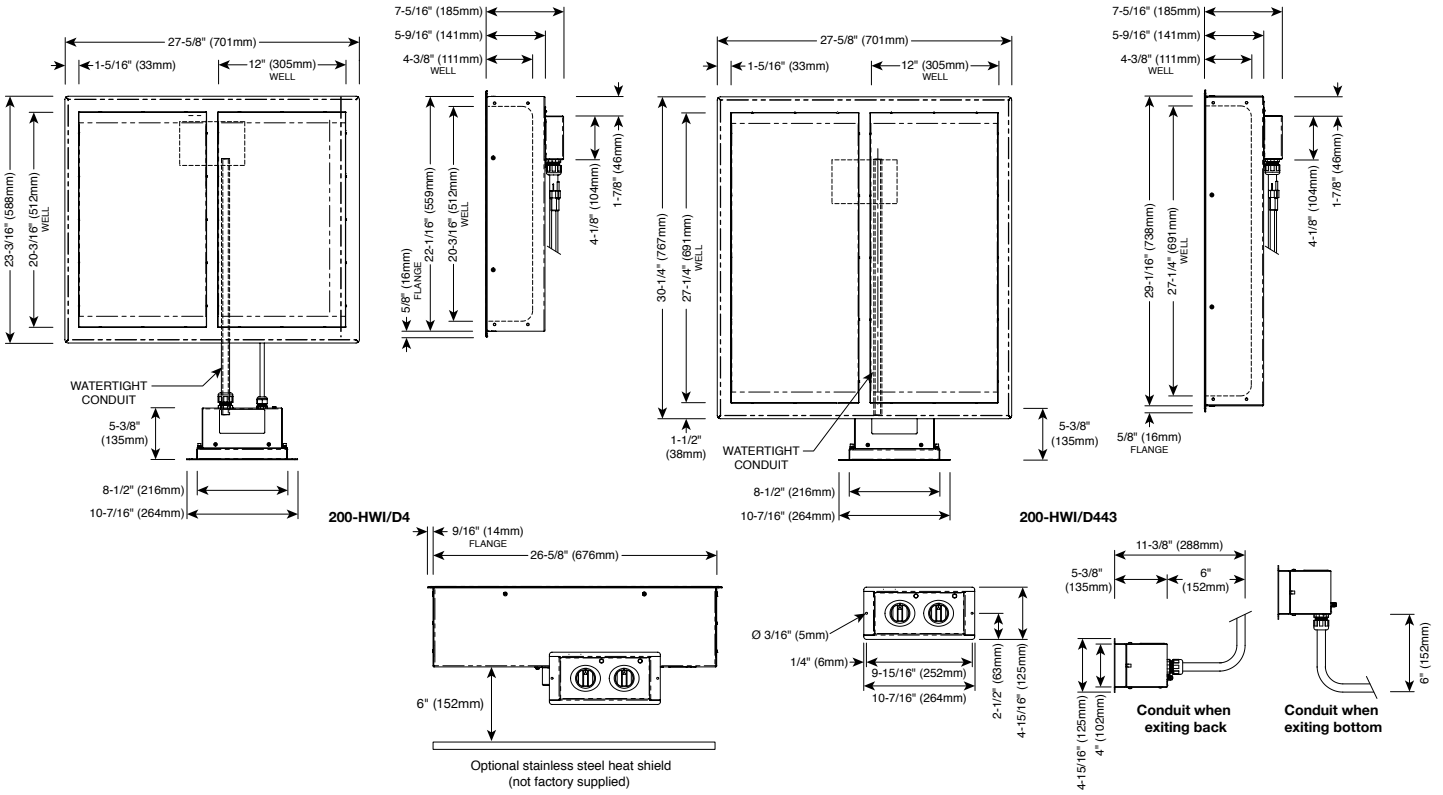

200-HWILF

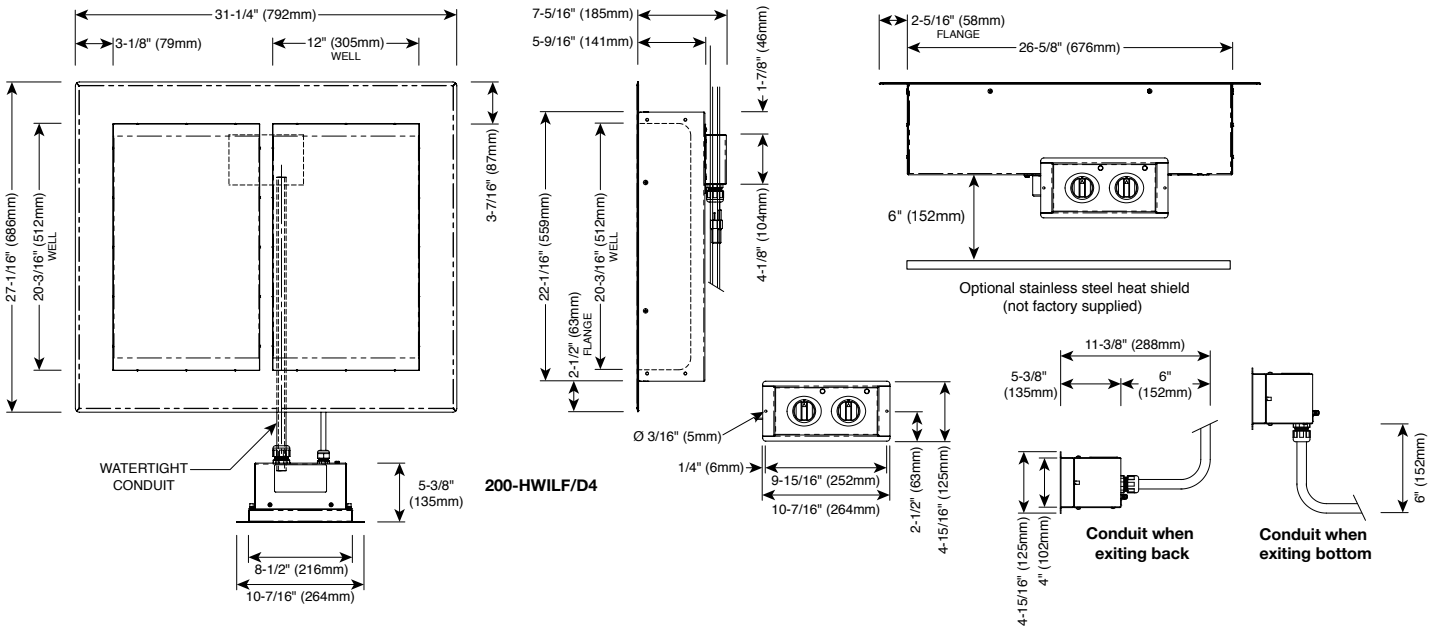

200-HWIS

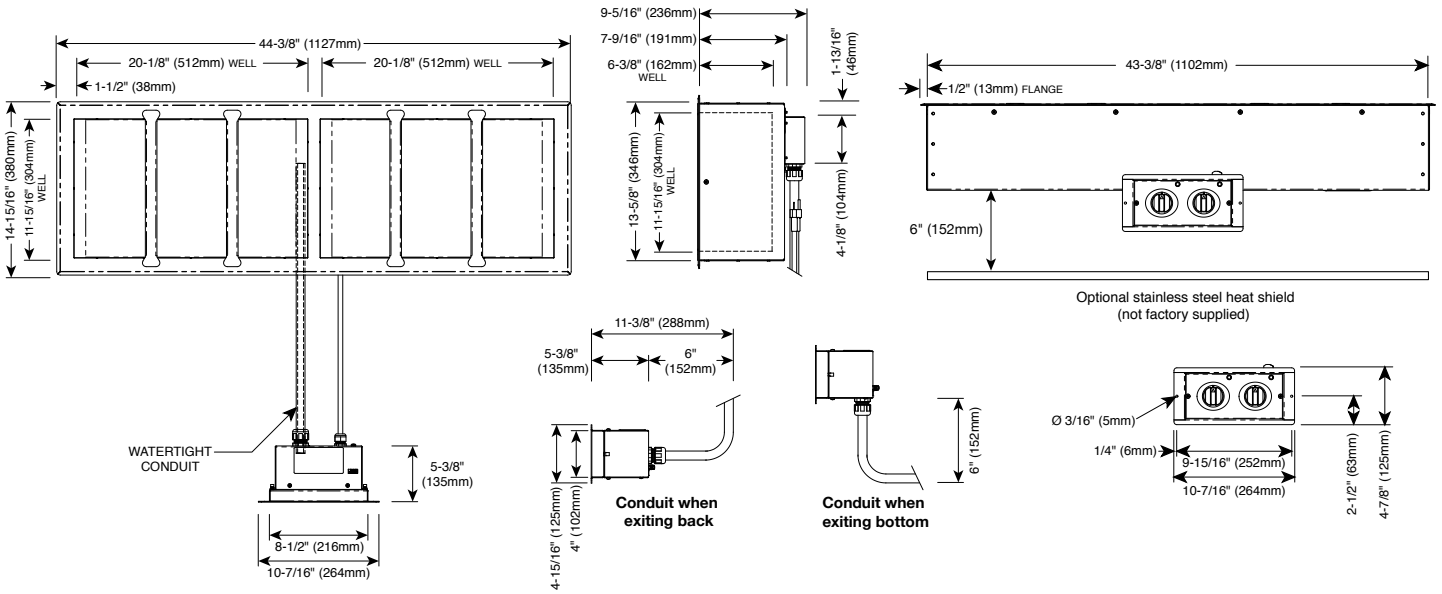
44-3/8" (1127mm)
20-1/8" (512mm) WELL
20-1/8" (512mm) WELL
1-1/2" (38mm)
14-15/16" (380mm)
11-15/16" (304mm) WELL
WATERTIGHT CONDUIT
5-3/8" (135mm)
8-1/2" (216mm)
10-7/16" (264mm)
9-5/16" (236mm)
7-9/16" (191mm)
6-3/8" (162mm) WELL
1-13/16" (46mm)
13-5/8" (346mm)
11-15/16" (304mm) WELL
4-1/8" (104mm)
43-3/8" (1102mm)
1/2" (13mm) FLANGE
6" (152mm)
Optional stainless steel heat shield (not factory supplied)
11-3/8" (288mm)
5-3/8" (135mm)
6" (152mm)
4-15/16" (125mm)
4" (102mm)
Conduit when exiting back
6" (152mm)
Conduit when exiting bottom
Ø 3/16" (5mm)
1/4" (6mm)
9-15/16" (252mm)
10-7/16" (264mm)
2-1/2" (63mm)
4-7/8" (125mm)

300-HW

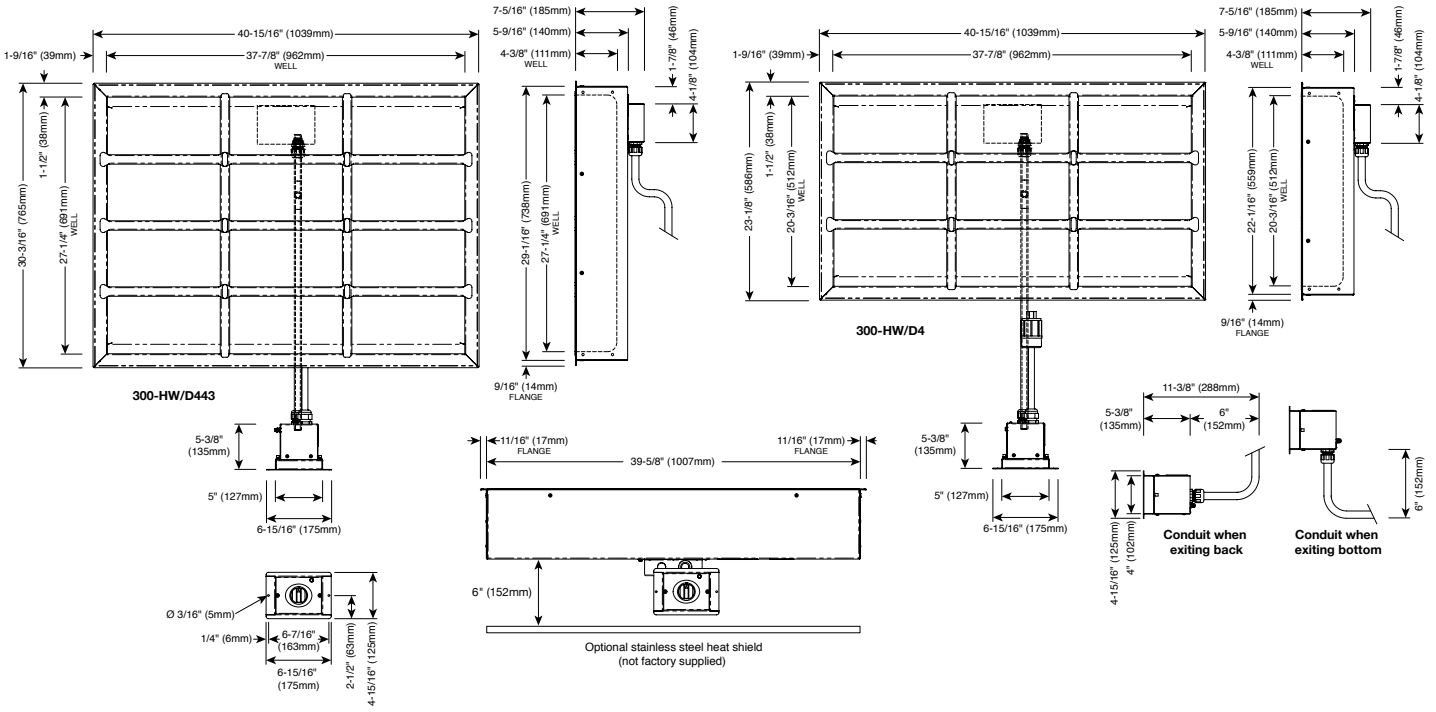

300-HWLF

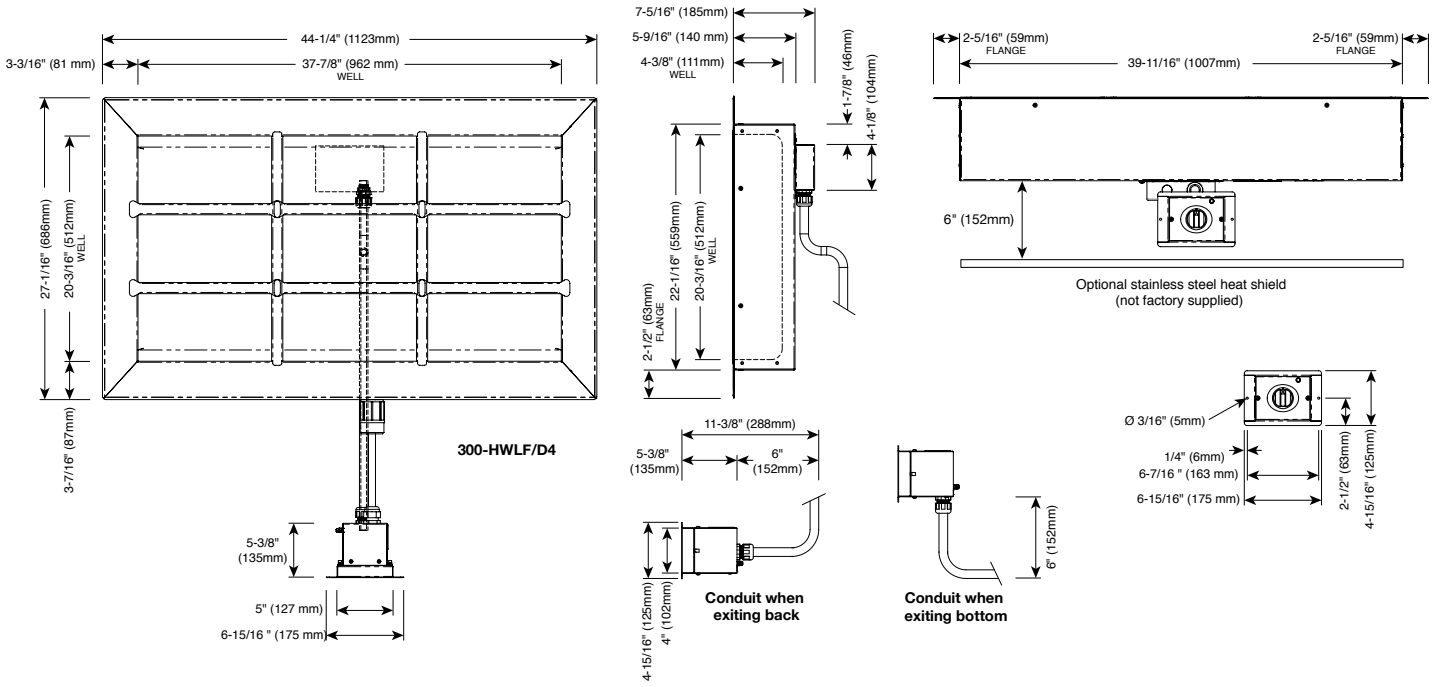

300-HWI

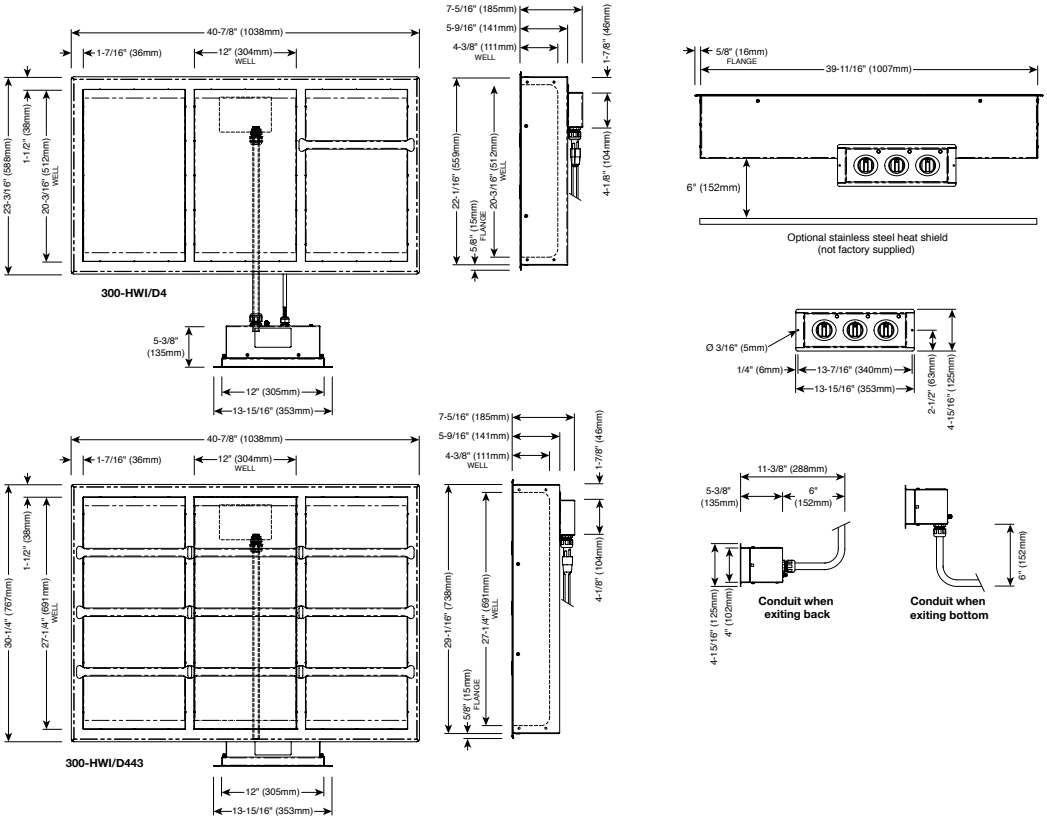

300-HWILF

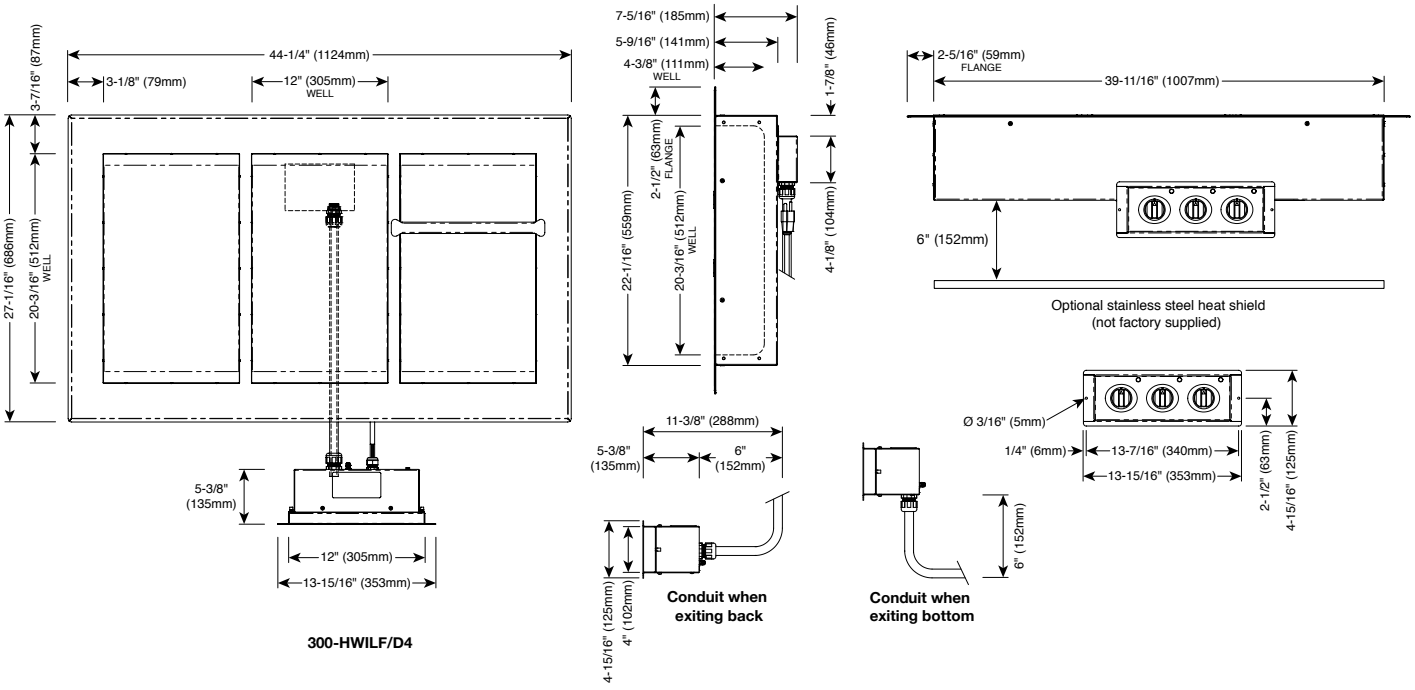

300-HWIS

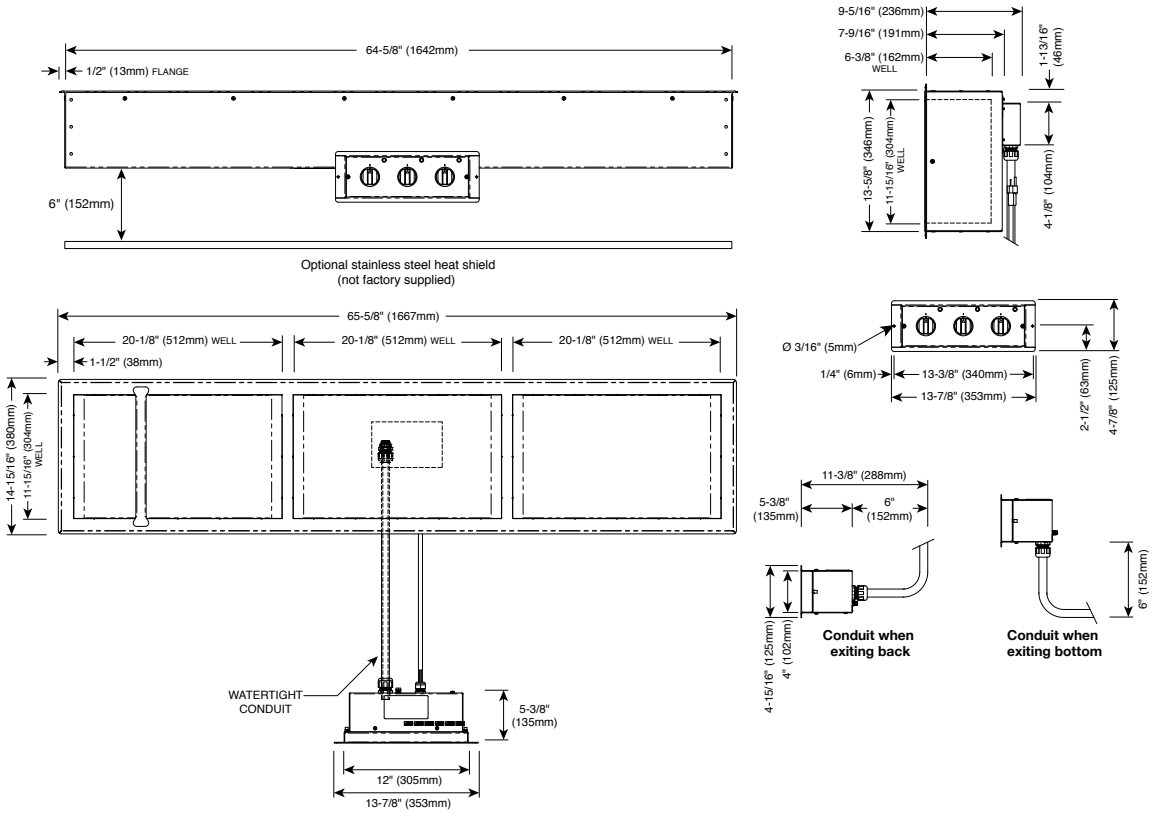
64-5/8" (1642mm)
1/2" (13mm) FLANGE
6" (152mm)
Optional stainless steel heat shield
(not factory supplied)
9-5/16" (236mm)
7-9/16" (191mm)
6-3/8" (162mm)
WELL
1-13/16"
(46mm)
13-5/8" (346mm)
11-15/16" (304mm)
WELL
4-1/8" (104mm)
65-5/8" (1667mm)
20-1/8" (512mm) WELL
20-1/8" (512mm) WELL
20-1/8" (512mm) WELL
1-1/2" (38mm)
14-15/16" (380mm)
11-15/16" (304mm)
WELL
Ø 3/16" (5mm)
1/4" (6mm)
13-3/8" (340mm)
13-7/8" (353mm)
2-1/2" (63mm)
4-7/8" (125mm)
11-3/8" (288mm)
5-3/8"
(135mm)
6"
(152mm)
4-15/16" (125mm)
4" (102mm)
Conduit when
exiting back
Conduit when
exiting bottom
6" (152mm)
WATERTIGHT
CONDUIT
5-3/8"
(135mm)
12" (305mm)
13-7/8" (353mm)

400-HW

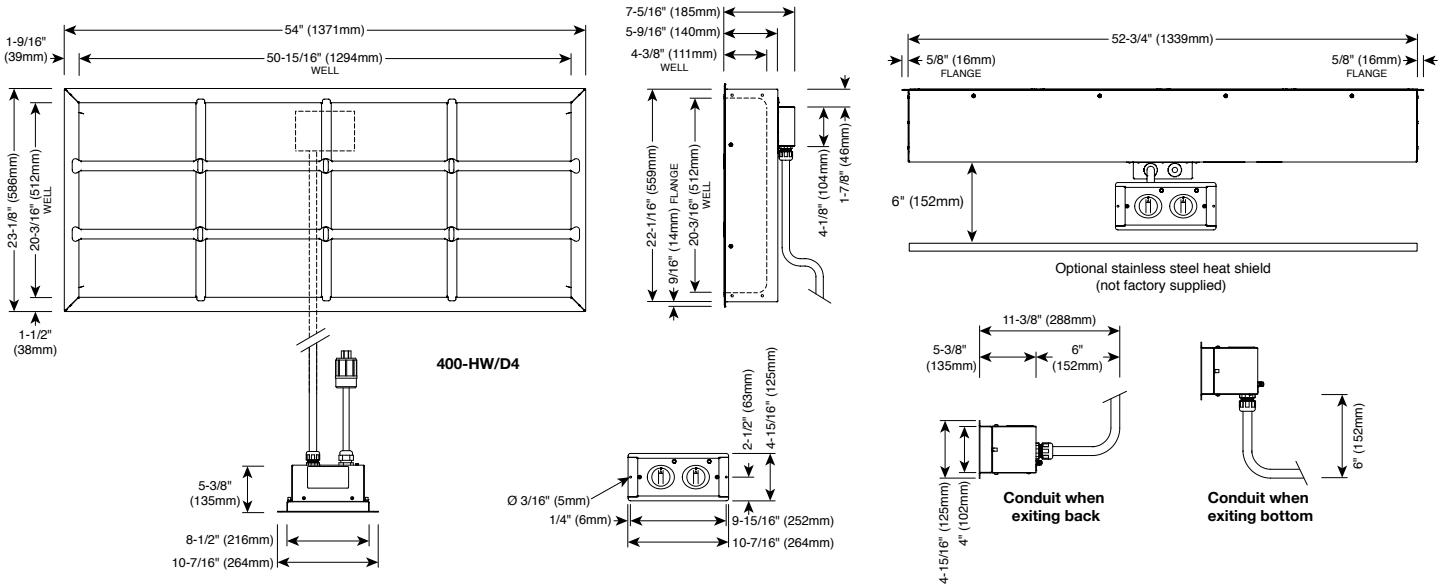

400-HWLF

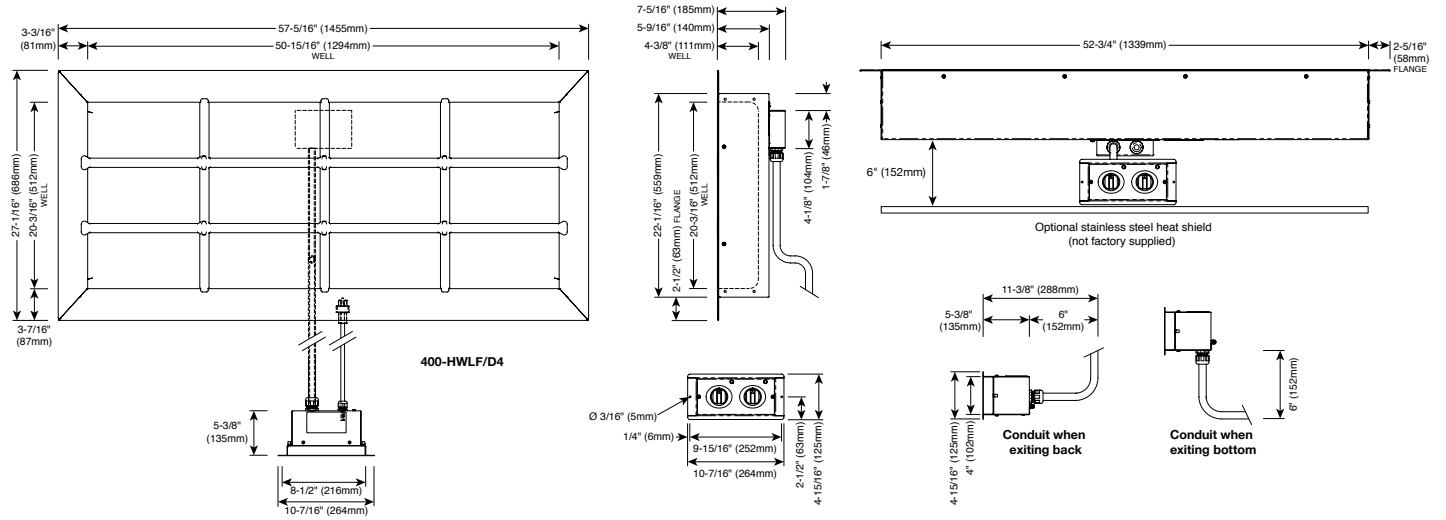

400-HWI

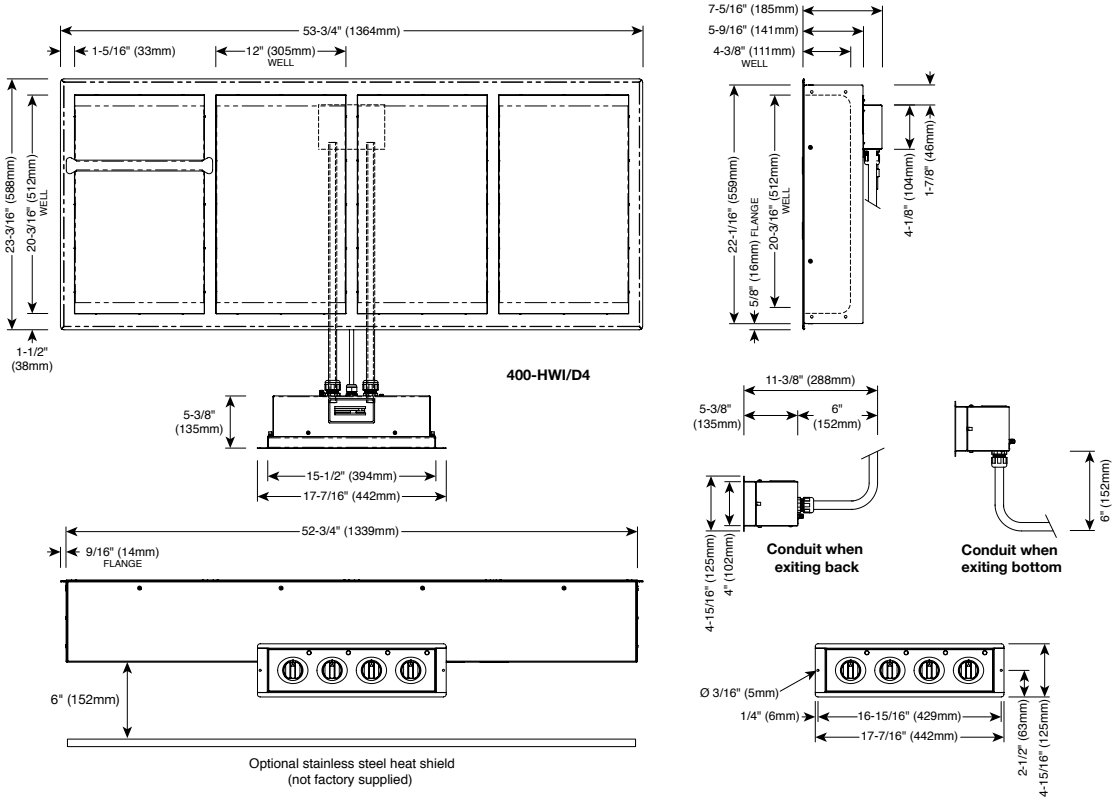

400-HWILF

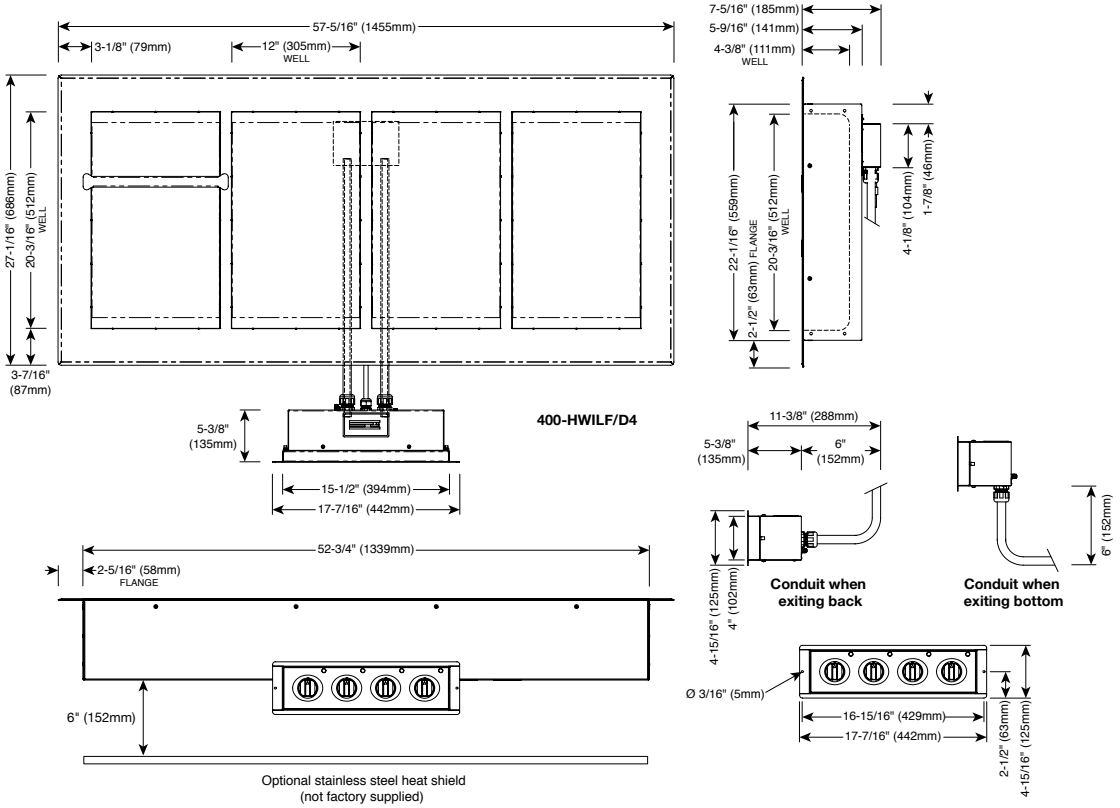

500-HW

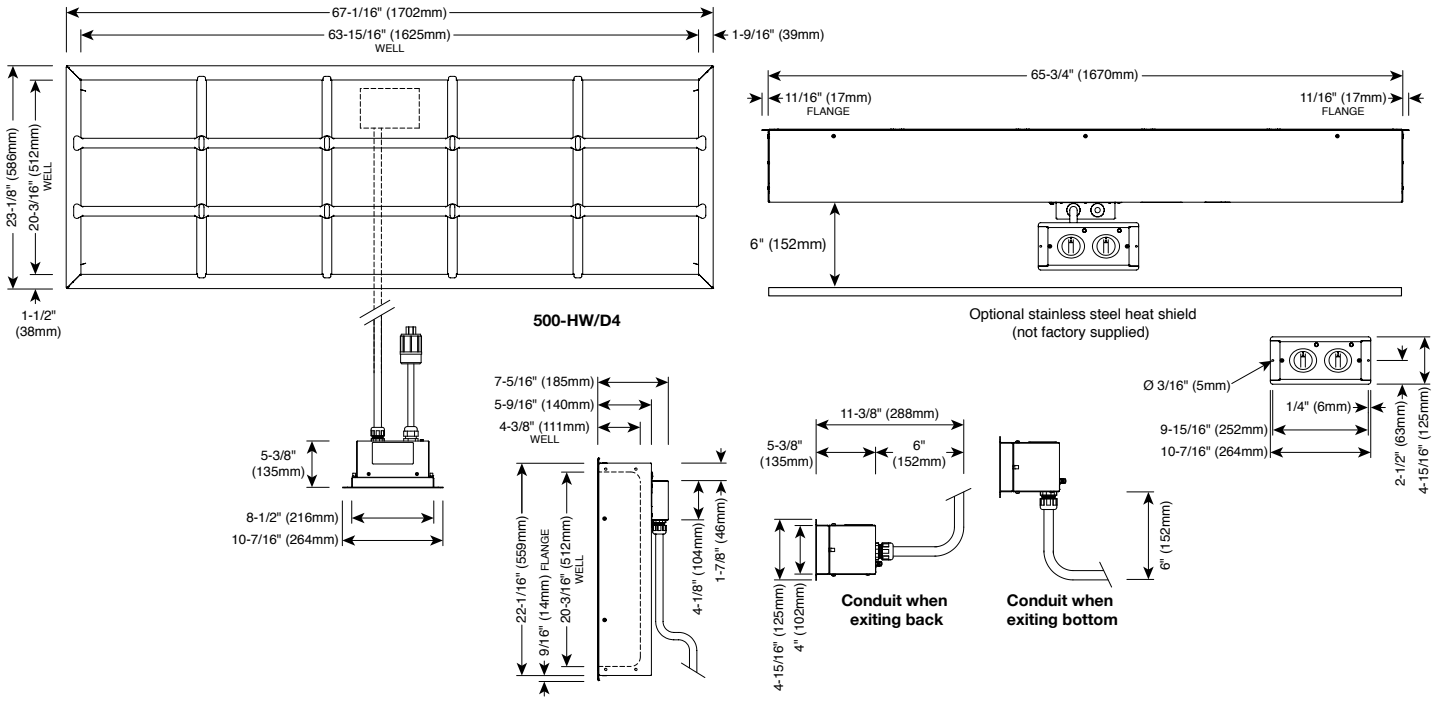

500-HWLF

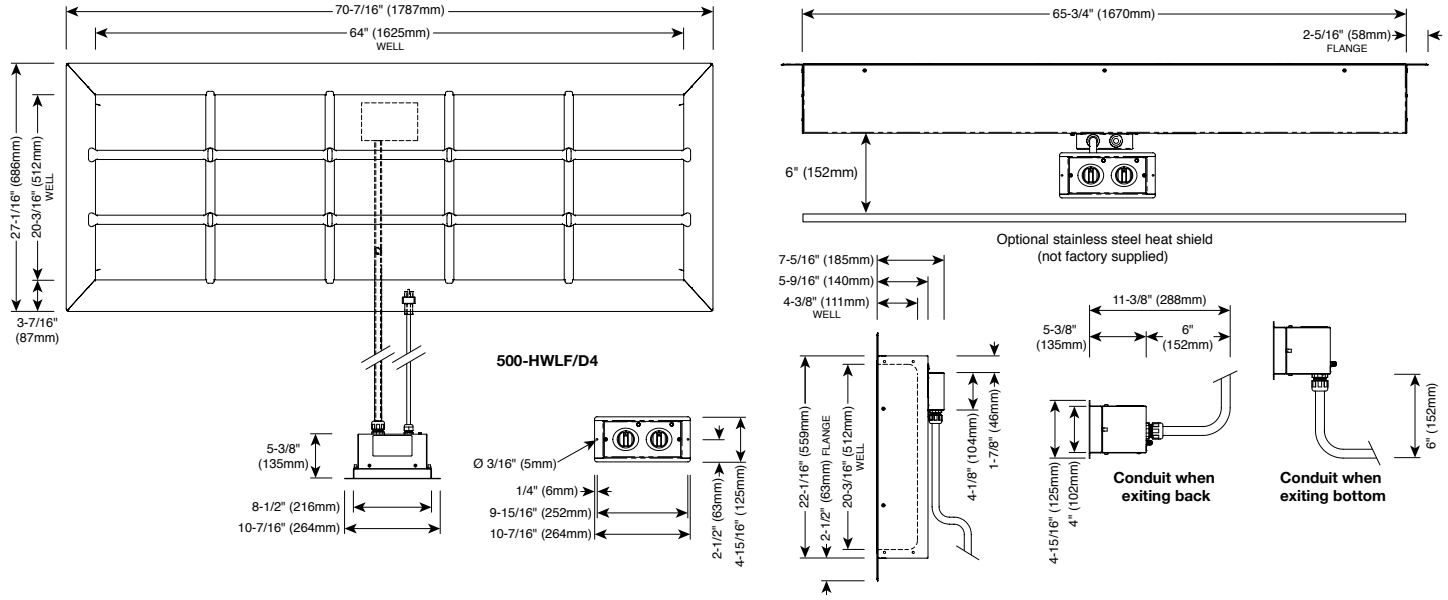

500-HWI

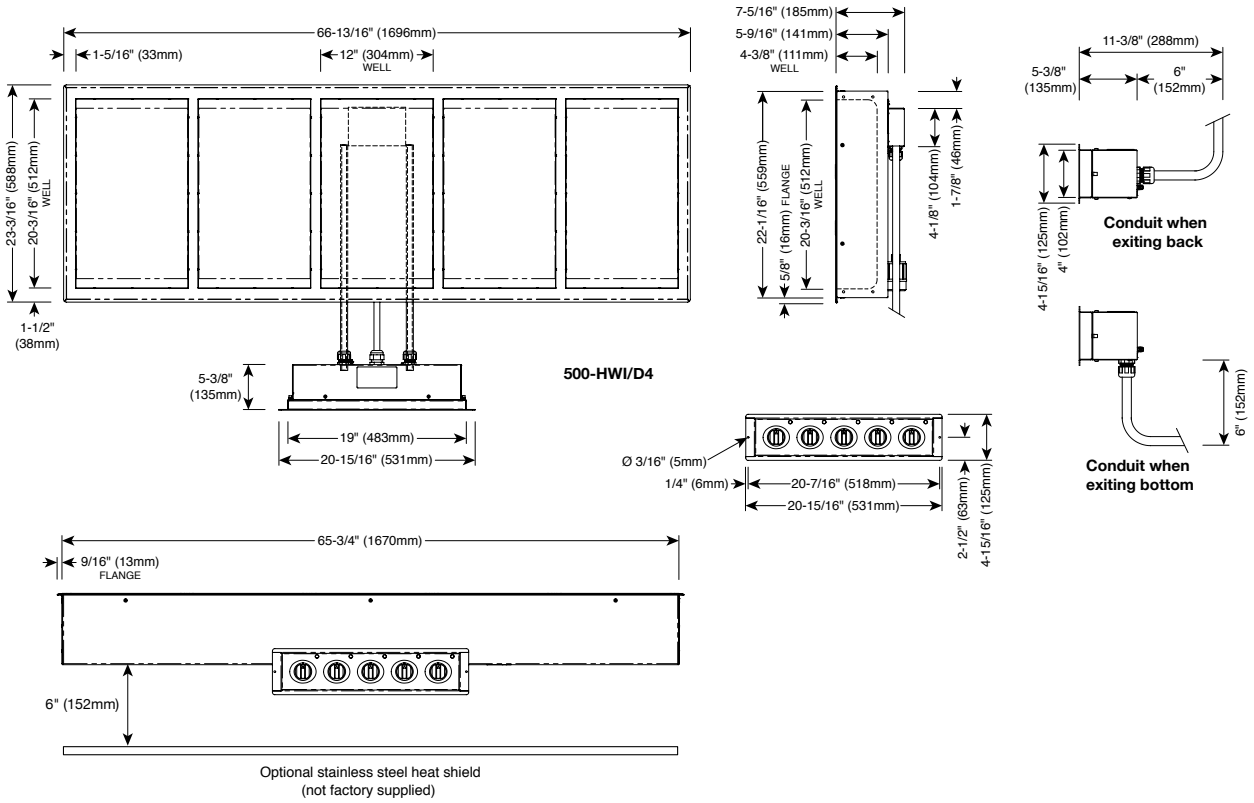

500-HWILF

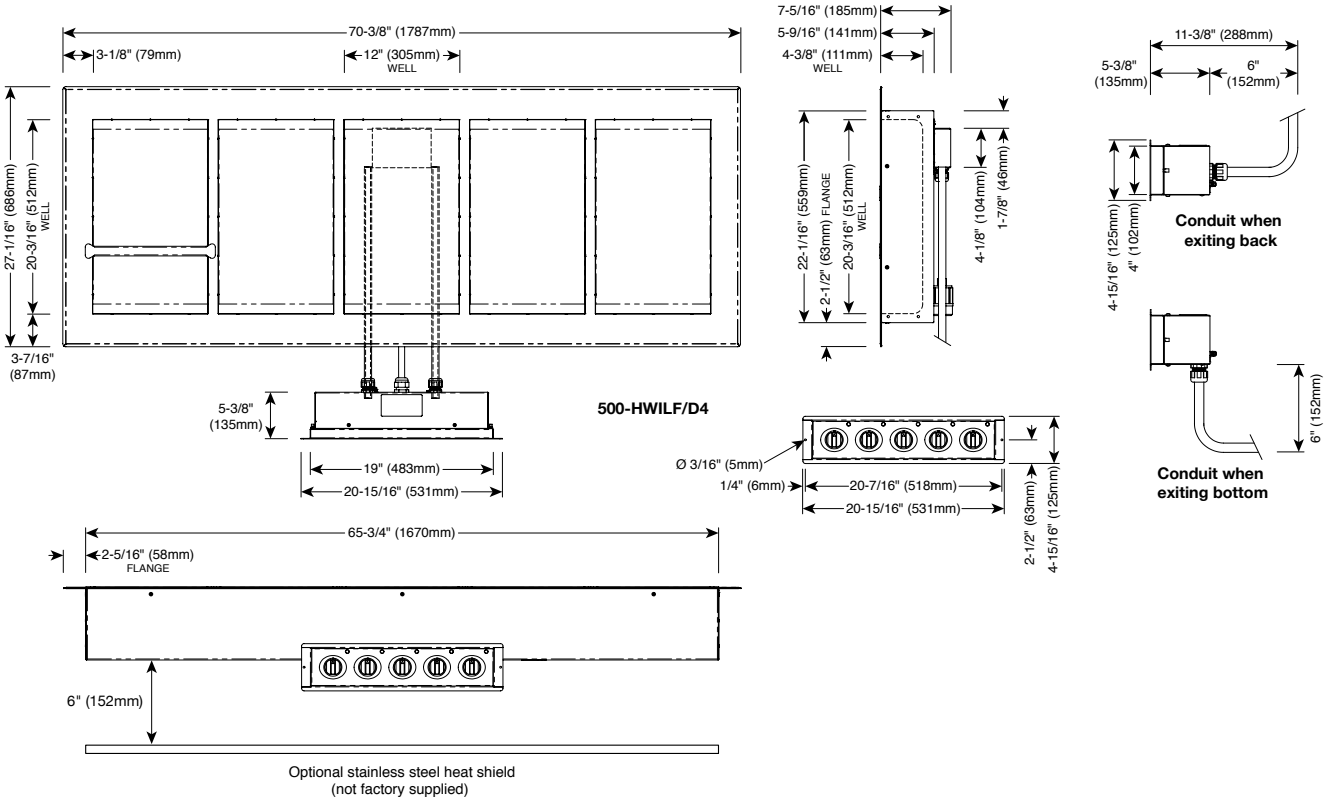

Model	Overall Exterior			Well Interior		
	Height	Width	Depth	Height	Width	Depth
100-HW/D4	7" (177mm)	15" (380mm)	23-1/8" (586mm)	4-3/8" (111mm)	12" (304mm)	20-3/16" (512mm)
100-HW/D6	8-7/8" (225mm)	15" (380mm)	23-1/8" (585mm)	6-3/8" (162mm)	12" (304mm)	20-3/16" (512mm)
100-HW/D443	6-5/16" (159mm)	15" (380mm)	30-3/16" (765mm)	4-3/8" (111mm)	12" (304mm)	27-1/4" (691mm)
100-HW/D643	8-3/16" (207mm)	15" (380mm)	30-3/16" (765mm)	6-3/8" (162mm)	12" (304mm)	27-1/4" (691mm)
100-HWLF/D4	7" (177mm)	18-5/16" (465mm)	27-1/16" (686mm)	4-3/8" (111mm)	12" (304mm)	20-3/16" (512mm)
100-HWLF/D6	8-7/8" (225mm)	18-5/16" (465mm)	27-1/16" (686mm)	6-3/8" (162mm)	12" (304mm)	20-3/16" (512mm)
200-HW/D4	7-5/16" (185mm)	28-1/16" (712mm)	23-1/8" (586mm)	4-3/8" (111mm)	25" (635mm)	20-3/16" (512mm)
200-HW/D6	9-5/16" (235mm)	28-1/16" (712mm)	23-1/8" (586mm)	6-3/8" (162mm)	25" (635mm)	20-3/16" (512mm)
200-HW/D443	7-5/16" (184mm)	28-1/16" (712mm)	30-3/16" (765mm)	4-3/8" (111mm)	12" (304mm)	27-1/4" (691mm)
200-HW/D643	9-3/16" (233mm)	28-1/16" (712mm)	30-3/16" (765mm)	6-3/8" (162mm)	12" (304mm)	27-1/4" (691mm)
200-HWLF/D4	7-5/16" (184mm)	31-3/8" (796mm)	27-1/16" (686mm)	4-3/8" (111mm)	25" (635mm)	20-3/16" (512mm)
200-HWLF/D6	9-1/4" (234mm)	31-3/8" (796mm)	27-1/16" (686mm)	6-3/8" (162mm)	25" (635mm)	20-3/16" (512mm)
200-HWI/D4	7-5/16" (185mm)	27-5/8" (701mm)	23-3/16" (588mm)	4-3/8" (111mm)	12" (304mm)	20-3/16" (512mm)
200-HWI/D6	9-5/16" (236mm)	27-5/8" (701mm)	23-3/16" (588mm)	6-3/8" (162mm)	12" (304mm)	20-3/16" (512mm)
200-HWI/D443	7-5/16" (185mm)	27-5/8" (701mm)	30-1/4" (767mm)	4-3/8" (111mm)	12" (304mm)	27-1/4" (691mm)
200-HWI/D643	9-1/4" (234mm)	27-5/8" (701mm)	30-1/4" (767mm)	6-3/8" (162mm)	12" (304mm)	27-1/4" (691mm)
200-HWILF/D4	7-5/16" (185mm)	31-1/4" (792mm)	27-1/16" (686mm)	4-3/8" (111mm)	12" (304mm)	20-3/16" (512mm)
200-HWILF/D6	9-5/16" (236mm)	31-1/4" (792mm)	27-1/16" (686mm)	6-3/8" (162mm)	12" (304mm)	20-3/16" (512mm)
300-HW/D4	7-5/16" (185mm)	40-15/16" (1039mm)	23-1/8" (586mm)	4-3/8" (111mm)	37-7/8" (962mm)	20-3/16" (512mm)
300-HW/D6	9-1/4" (234mm)	40-15/16" (1039mm)	23-1/8" (586mm)	6-3/8" (162mm)	37-7/8" (962mm)	20-3/16" (512mm)
300-HW/D443	7-5/16" (185mm)	40-15/16" (1039mm)	30-3/16" (765mm)	4-3/8" (111mm)	37-7/8" (962mm)	27-1/4" (691mm)
300-HW/D643	9-3/16" (233mm)	40-15/16" (1039mm)	30-3/16" (765mm)	6-3/8" (162mm)	37-7/8" (962mm)	27-1/4" (691mm)
300-HWLF/D4	7-5/16" (185mm)	44-1/4" (1123mm)	27-1/16" (686mm)	4-3/8" (111mm)	37-7/8" (962mm)	20-3/16" (512mm)
300-HWLF/D6	9-1/8" (232mm)	44-1/4" (1123mm)	27-1/16" (686mm)	6-3/8" (162mm)	37-7/8" (962mm)	20-3/16" (512mm)
300-HWI/D4	7-5/16" (185mm)	40-7/8" (1038mm)	23-3/16" (588mm)	4-3/8" (111mm)	12" (304mm)	20-3/16" (512mm)
300-HWI/D6	9-1/4" (234mm)	40-7/8" (1038mm)	23-3/16" (588mm)	6-3/8" (162mm)	12" (304mm)	20-3/16" (512mm)
300-HWI/D443	7-5/16" (185mm)	40-7/8" (1038mm)	30-1/4" (767mm)	4-3/8" (111mm)	12" (304mm)	27-1/4" (691mm)
300-HWI/D643	9-1/4" (234mm)	40-7/8" (1038mm)	30-1/4" (767mm)	6-3/8" (162mm)	12" (304mm)	27-1/4" (691mm)
300-HWILF/D4	7-5/16" (185mm)	44-1/4" (1124mm)	27-1/16" (686mm)	4-3/8" (111mm)	12" (304mm)	20-3/16" (512mm)
300-HWILF/D6	9-1/4" (234mm)	44-1/4" (1124mm)	27-1/16" (686mm)	6-3/8" (162mm)	12" (304mm)	20-3/16" (512mm)
400-HW/D4	7-5/16" (185mm)	54" (1371mm)	23-1/8" (586mm)	4-3/8" (111mm)	50-15/16" (1294mm)	20-3/16" (512mm)
400-HW/D6	9-5/16" (235mm)	54" (1371mm)	23-1/8" (586mm)	6-3/8" (162mm)	50-15/16" (1294mm)	20-3/16" (512mm)
400-HWLF/D4	7-5/16" (185mm)	57-5/16" (1455mm)	27-1/16" (686mm)	4-3/8" (111mm)	50-15/16" (1294mm)	20-3/16" (512mm)
400-HWLF/D6	9-5/16" (235mm)	57-5/16" (1455mm)	27-1/16" (686mm)	6-3/8" (162mm)	50-15/16" (1294mm)	20-3/16" (512mm)
400-HWI/D4	7-5/16" (185mm)	53-3/4" (1364mm)	23-3/16" (588mm)	4-3/8" (111mm)	12" (304mm)	20-3/16" (512mm)
400-HWI/D6	9-5/16" (236mm)	53-3/4" (1364mm)	23-3/16" (588mm)	6-3/8" (162mm)	12" (304mm)	20-3/16" (512mm)
400-HWILF/D4	7-5/16" (185mm)	57-5/16" (1455mm)	27-1/16" (686mm)	4-3/8" (111mm)	12" (304mm)	20-3/16" (512mm)
400-HWILF/D6	9-5/16" (238mm)	57-5/16" (1455mm)	27-1/16" (686mm)	6-3/8" (162mm)	12" (304mm)	20-3/16" (512mm)
500-HW/D4	7-5/16" (185mm)	67-1/16" (1702mm)	23-1/8" (586mm)	4-3/8" (111mm)	63-15/16" (1625mm)	20-3/16" (512mm)
500-HW/D6	9-5/16" (235mm)	67-1/16" (1702mm)	23-1/8" (586mm)	6-3/8" (162mm)	63-15/16" (1625mm)	20-3/16" (512mm)
500-HWLF/D4	7-5/16" (185mm)	70-7/16" (1787mm)	27-1/16" (686mm)	4-3/8" (111mm)	64" (1625mm)	20-3/16" (512mm)
500-HWLF/D6	9-5/16" (235mm)	70-7/16" (1787mm)	27-1/16" (686mm)	6-3/8" (162mm)	64" (1625mm)	20-3/16" (512mm)
500-HWI/D4	7-5/16" (185mm)	66-13/16" (1696mm)	23-3/16" (588mm)	4-3/8" (111mm)	12" (304mm)	20-3/16" (512mm)
500-HWI/D6	9-5/16" (236mm)	66-13/16" (1696mm)	23-3/16" (588mm)	6-3/8" (162mm)	12" (304mm)	20-3/16" (512mm)
500-HWILF/D4	7-5/16" (185mm)	70-3/8" (1787mm)	27-1/16" (686mm)	4-3/8" (111mm)	12" (304mm)	20-3/16" (512mm)
500-HWILF/D6	9-5/16" (238mm)	70-3/8" (1787mm)	27-1/16" (686mm)	6-3/8" (162mm)	12" (304mm)	20-3/16" (512mm)

Rough Cut Openings

Model	Counter Cutout (W x D)	Control Box Cutout (H x W x D)
100-HW/D4 or D6 **One full-size pan** 100-HWLF/D4 or D6 **One full-size pan**	14-1/4" x 22-3/4" (362mm x 578mm)	4-1/4" x 5-1/4" x 11-3/8" (108mm x 133mm x 288mm)
100-HW/D443 or D643 **One full and one third-size pan**	14-1/4" x 29-1/2" (362mm x 749mm)	4-1/4" x 5-1/4" x 11-3/8" (108mm x 133mm x 288mm)
200-HW/D4 or D6 **Two full-size pans** 200-HWLF/D4 or D6 **Two full-size pans**	27-1/4" x 22-3/4" (692mm x 578mm)	4-1/4" x 5-1/4" x 11-3/8" (108mm x 133mm x 288mm)
200-HW/D443 or D643 **Two full and two third-size pans**	27-1/4" x 29-1/2" (692mm x 749mm)	4-1/4" x 5-1/4" x 11-3/8" (108mm x 133mm x 288mm)
200-HWI/D4 or D6 **Two full-size pans** 200-HWILF/D4 or D6 **Two full-size pans**	27-1/4" x 22-3/4" (692mm x 578mm)	4-1/4" x 8-3/4" x 11-3/8" (108mm x 222mm x 288mm)
200-HWI/D443 or D643 **Two full and two third-size pans**	27-1/4" x 29-3/4" (692mm x 756mm)	4-1/4" x 8-3/4" x 11-3/8" (108mm x 222mm x 288mm)
200-HWIS/D6 **Two full-size pans**	44" x 14-1/4" (1118mm x 362mm)	4-1/4" x 8-3/4" x 11-3/8" (108mm x 222mm x 288mm)
300-HW/D4 or D6 **Three full-size pans** 300-HWLF/D4 or D6 **Three full-size pans**	40-1/4" x 22-3/4" (1022mm x 578mm)	4-1/4" x 5-1/4" x 11-3/8" (108mm x 133mm x 288mm)
300-HW/D443 or D643 **Three full and three third-size pans**	40-1/4" x 29-3/4" (1022mm x 756mm)	4-1/4" x 5-1/4" x 11-3/8" (108mm x 133mm x 288mm)
300-HWI/D4 or D6 **Three full-size pans** 300-HWILF/D4 or D6 **Three full-size pans**	40-1/4" x 22-3/4" (1022mm x 578mm)	4-1/4" x 12-1/4" x 11-3/8" (108mm x 311-3/8mm x 288mm)
300-HWI/D443 or D643 **Three full and three third-size pans**	40-1/4" x 29-3/4" (1022mm x 756mm)	4-1/4" x 12-1/4" x 11-3/8" (108mm x 311-3/8mm x 288mm)
300-HWIS/D6 **Three full-size pans**	65-1/4" x 14-1/4" (1657mm x 362mm)	4-1/4" x 12-1/4" x 11-3/8" (108mm x 311-3/8mm x 288mm)
400-HW/D4 or D6 **Four full-size pans** 400-HWLF/D4 or D6 **Four full-size pans**	53-3/8" x 22-3/4" (1356mm x 578mm)	4-1/4" x 8-3/4" x 11-3/8" (108mm x 222mm x 288mm)
400-HWI/D4 or D6 **Four full-size pans** 400-HWILF/D4 or D6 **Four full-size pans**	53-3/8" x 22-3/4" (1356mm x 578mm)	4-1/4" x 15-3/4" x 11-3/8" (108mm x 400mm x 288mm)
500-HW/D4 or D6 **Five full-size pans** 500-HWLF/D4 or D6 **Five full-size pans**	66-1/2" x 22-3/4" (1689mm x 578mm)	4-1/4" x 8-3/4" x 11-3/8" (108mm x 222mm x 288mm)
500-HWI/D4 or D6 **Five full-size pans** 500-HWILF/D4 or D6 **Five full-size pans**	66-1/2" x 22-3/4" (1689mm x 578mm)	4-1/4" x 19-1/4" x 11-3/8" (108mm x 489mm x 288mm)

Locking Kit 5020849 Installation (Option)

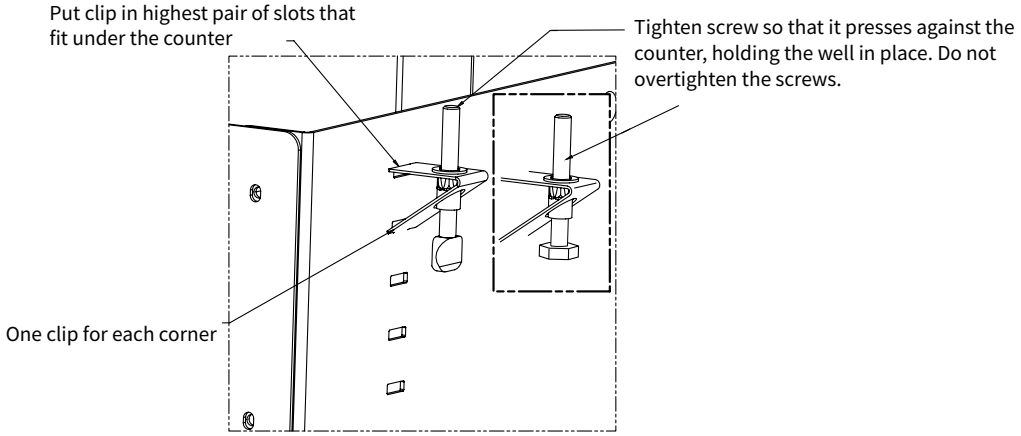

Remote Control Housing Mounting Instructions

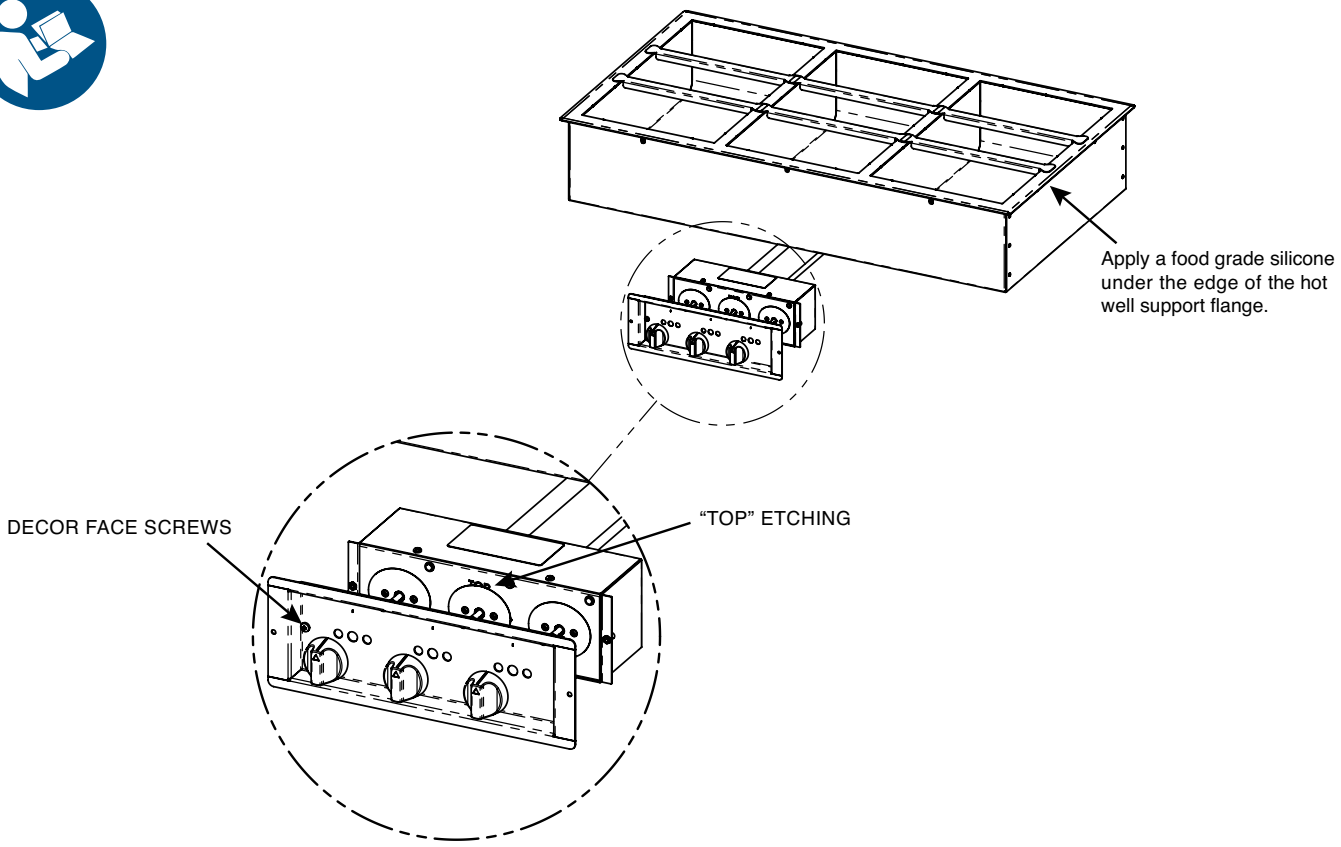

1. Cut an appropriate sized opening in the location where the control is to be positioned. **See Rough Cut Openings page for cutout size.**
2. Thoroughly clean and dry the mounting surface around the control cut-out opening on which the décor face will be applied.

   NOTICE: The control face will not properly adhere to an unclean surface.
3. Remove the knob(s) from the thermostat(s) by pulling knob away from control. Remove the décor face from the appliance by removing the two (2) screws located to the right and left of the thermostat.
4. Making sure "TOP" etching is at the top, route control housing through opening cut in step 1. Secure the décor face housing to the control housing using the screws removed in step 3.
5. Remove the protective film from the mounting tape on the inside flanges of the décor face and apply the décor face to the mounting surface. Two holes are provided in décor face for additional mounting screws (not provided) if desired.
6. Reattach the knob(s) to the thermostat(s).

Undermount Kit 5020793 Installation (Option)

AFFECTED MODELS TO INCLUDE: 100-HW

PURPOSE: INSTRUCTIONS FOR MOUNTING A 100-HW HOTWELL UNDER A COUNTERTOP

NOTE: KIT ASSEMBLY # 5020793

TOOLS NEEDED: PLATE TO MIX EPOXY ON, STICK TO MIX WITH, TAPE, MARKER, SCISSORS, 7/16" WRENCH, PLIERS

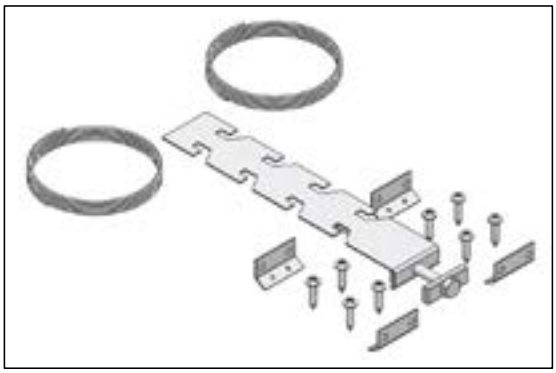

REV.	ECO	DESCRIPTION	DATE	APP
0	7530	NEW RELEASE		JRK
1	7530	ADDED UNDERMOUNT HARNESS	3/17/2016	JJH

KIT 5020793

1

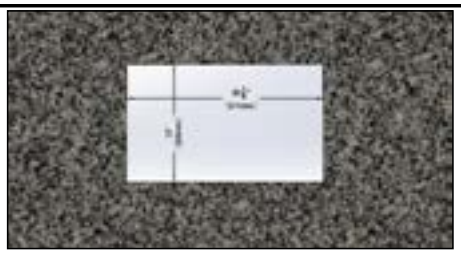

❑ CLEAN THE BOTTOM SURFACE OF THE COUNTER THAT THE HOT WELL WILL MOUNT TO (INSIDE CUTOUT SURFACE OF COUNTER MUST BE FINISHED/SEALED FOR SANITATION PURPOSES. A SOLID SURFACE OR METAL COUNTER IS SUGGESTED).
NOTE: CUTOUT DIMENSIONS ARE SHOWN IN THE IMAGE BUT ARE NOT INCLUDED IN THESE INSTRUCTIONS. 6" [153mm] MINIMUM CLEARANCE FROM EACH SIDE OF THE CUTOUT IS REQUIRED FOR UNDERMOUNT INSTALLATION.

2

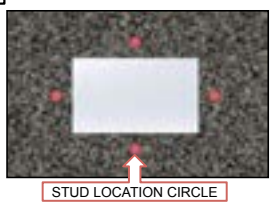

❑ USE A PAPER GAUGE (KIT INCLUDES PAPER TEMPLATES - USE SCISSORS TO CUT THE IMAGES OUT AND FOLD ON DASHED LINES). MARK STUD LOCATION CIRCLES AT THE CENTER OF EACH OF THE FOUR SIDES OF THE CUTOUT ON THE BOTTOM SIDE OF THE COUNTER.
NOTE: IF POSSIBLE, ROTATE COUNTER TO BOTTOM SIDE UP FOR EASIER INSTALLATION, BUT INSTRUCTIONS ARE INCLUDED IF YOU ARE NOT ABLE TO DO SO.

3

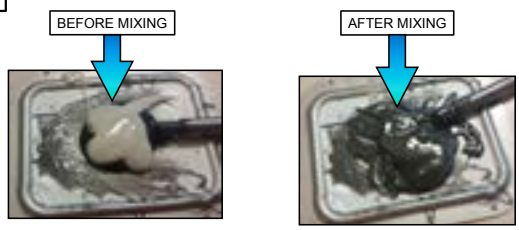

❑ MIX J-B WELD STEEL AND HARDENER AT 1:1 RATIO (2 OZ WILL BE ENOUGH FOR FOUR STUDS).

4

❑ SPREAD MIXED EPOXY ON TOP OF BASE PLATE OF STUD. THE EPOXY SHOULD BE APPROXIMATELY SAME THICKNESS AS THE BASE PLATE.
NOTE: SCREWING THE WING NUT ALL THE WAY ON AND THEN BACK OFF IS A GOOD WAY TO CLEAR ANY EPOXY ON THREADS BEFORE IT DRIES.

Undermount Kit 5020793 Installation (option) - continued

5

❑ PRESS STUD ONTO BOTTOM OF COUNTER UNTIL THE EPOXY SEEPS THROUGH THE HOLES ON THE STUD BASE PLATE.

6

❑ SPREAD EPOXY EVENLY OVER BASE PLATE TO COMPLETELY COVER IT. KEEP THE EPOXY WITHIN THE DRAWN CIRCLES IN THE COUNTER REFERENCED IN STEP 2.

7

❑ APPLY TAPE TO HOLD THE STUD IN PLACE IF COUNTER IS BOTTOM SIDE DOWN. ALSO WRAP TAPE AROUND THE THREADS OF THE STUDS TO PREVENT DRIPS ONTO THE THREADS.
NOTE: A DROP CLOTH BELOW ALL THE STUDS IS RECOMMENDED TO CATCH ANY EPOXY DRIPS.

8

❑ ALLOW EPOXY TO DRY OVERNIGHT (APPROXIMATELY 15 HOURS).

9

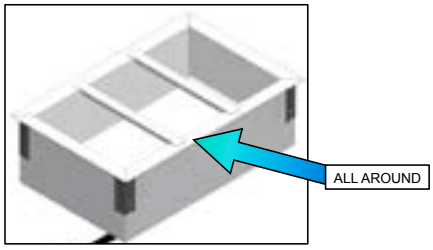

❑ APPLY A LINE OF FOOD GRADE SILICONE ALONG THE TOP FACE OF THE HOT WELL FLANGE AND PLACE THE HOT WELL CENTERED ON THE CUTOUT.
NOTE: IF COUNTER IS BOTTOM SIDE DOWN AND YOU HAVE NOTHING TO HOLD IT UP WITH, WAIT TO LOCATE THE HOTWELL UNTIL THE BRACKETS ARE ON.

10

❑ PLACE A BRACKET AND NUT ON EACH STUD AND TIGHTEN EACH UNTIL IT BEGINS TO GRAB THE BOTTOM OF THE HOT WELL FLANGE. IF THE COUNTER IS BOTTOM SIDE DOWN, TIGHTEN OPPOSITE SIDES FIRST TO HOLD THE WELL IN PLACE WHILE YOU TIGHTEN THE REMAINING TWO STUDS.

11

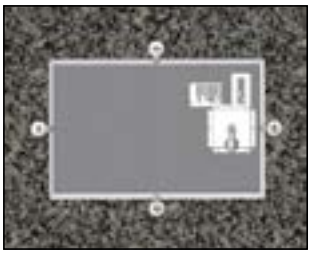

❑ HAND TIGHTEN THE WING NUT ENSURING THAT THE HOT WELL STAYS CENTERED ON THE COUNTER CUTOUT.

12

❑ REMOVE ANY SILICONE THAT SEEPED INTO THE WELL AFTER TIGHTENING THE BRACKETS AND NUTS.

Undermount Kit 5020793 Installation (option) - continued

13

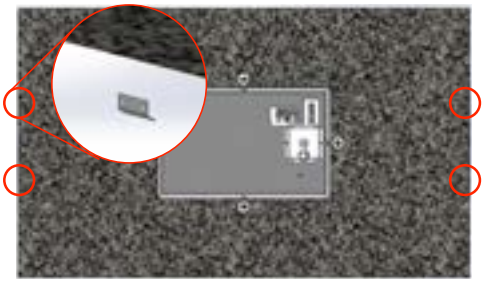

❑ INSTALL MOUNTING CLIPS INTO THE SIDE WALLS OF THE CABINET ABOUT 1" (25mm) FROM THE BOTTOM OF THE COUNTERTOP. THE DISTANCE BETWEEN THE CLIPS SHOULD BE ABOUT THE WIDTH OF THE HOT WELL.

14

ALTO-SHAAM TECH TEAM

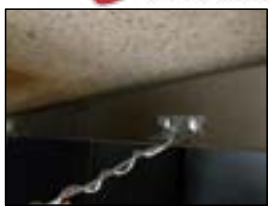

❑ FEED ONE END OF THE WIRE UP THROUGH THE OUTSIDE HOLE ON THE CLIP. LEAVE ABOUT 2" (51mm) OF EXCESS WIRE. BEND THE WIRE DOWN AND WRAP IT AROUND ITSELF TO SECURE IT IN PLACE.

15

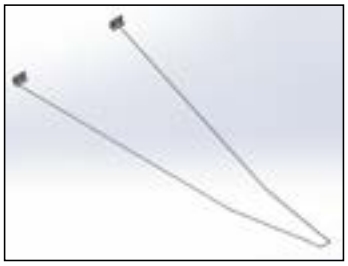

❑ BEND THE WIRE INTO A "V" 2-3" (51-76mm) AWAY FROM THE CENTER OF THE HOT WELL. FEED THE FREE END UP THROUGH THE OTHER CLIP, BEND, AND WRAP AS BEFORE.

16

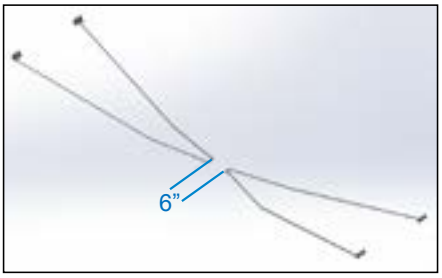

❑ REPEAT STEPS 14 & 15 FOR THE WIRE ON THE OPPOSITE SIDE. WHEN MAKING THE BEND, LEAVE ABOUT 6" (152mm) BETWEEN THE BENDS.

17

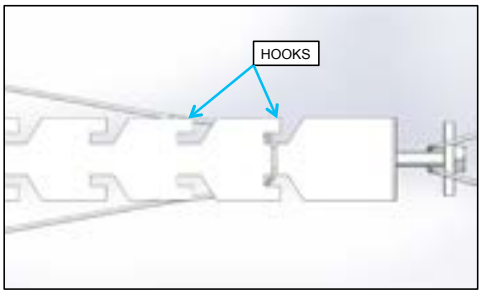

❑ LOOP ONE "V" AROUND THE T-NUT SO THAT THE LOOP GOES BELOW THE BOLT. HOOK THE OTHER "V" AT THE TIGHTEST HOOK POSSIBLE.

18

ALTO-SHAAM TECH TEAM

❑ TIGHTEN THE BOLT TO DRAW THE WIRES TIGHT.

Undermount Kit 5020793 Installation (option) - continued

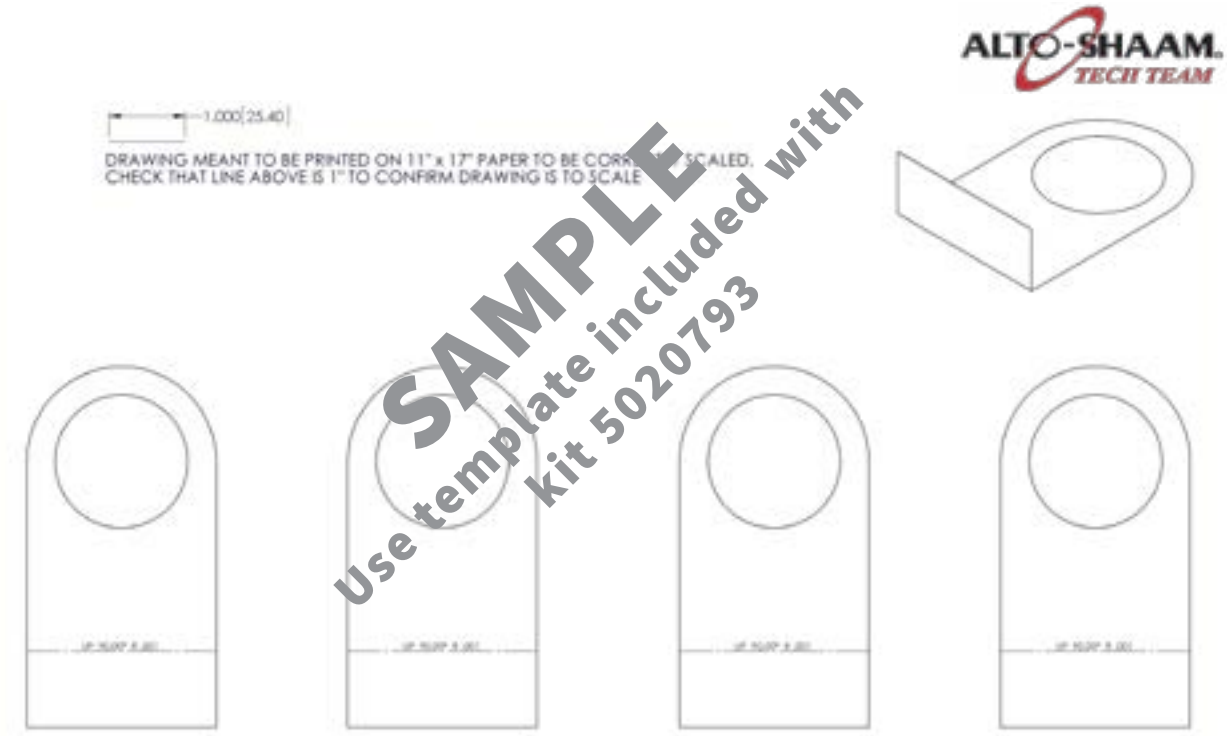

1. An identification tag is permanently mounted on the appliance.

2. This appliance is equipped with a three-prong grounding plug. For your protection against shock hazard this appliance should be plugged directly into a properly grounded three-prong receptacle. Do not cut or remove the grounding prong from this plug. Plug the appliance into a properly grounded receptacle ONLY, positioning the appliance so that the plug is easily accessible in case of an emergency. Arcing will occur when connecting or disconnecting the appliance unless all controls are in the off position.

3. Proper receptacle or outlet configuration or permanent wiring for this appliance must be installed by a licensed electrician in accordance with applicable local electrical codes.

NOTICE: Where local codes and CE regulatory requirements apply, appliances must be connected to an electrical circuit that is protected by an external GFCI outlet.

⚠ CAUTION

Power source must match voltage identified on appliance rating tag. The rating tag provides essential technical information required for any appliance installation, maintenance or repairs. Do not remove, damage or modify the rating tag.

WARNING

To prevent SERIOUS INJURY, DEATH or PROPERTY DAMAGE:

All electrical connections must be made by a qualified and trained service technician in accordance with applicable electrical codes.

⚠ WARNING

To prevent serious injury, death, or property damage:

All electrical connections must be made by a qualified and trained service technician in accordance with applicable electrical codes.

This appliance must be adequately grounded in accordance with local electrical codes or, in the absence of local codes, with the current edition of the National Electrical Code ANSI/NFPA No. 70. In Canada, all electrical connections are to be made in accordance with CSA C22.1, Canadian Electrical Code Part 1 or local codes.

CE-approved appliances include an equipotential-bonding terminal marked with the symbol shown on the left. Provisions for earthing are to be made in accordance with IEC:2010 60335-1 section 27 or local codes.

Electrical Connection

ALTO-SHAAM

Electrical SPECIFICATIONS (Refer to the wire diagrams sent with the appliance)

1 Phase, 50/60 Hz									
Voltage	Amps	kW	NEMA 5-15P 15A-125V PLUG 6 FT. (1.8m) CORD	NEMA 5-20P 20A-125V PLUG 6 FT. (1.8m) CORD	NEMA L5-30P 30A-125V PLUG 6 FT. (1.8m) CORD	NEMA 6-15P 15A-250V PLUG 9 FT. (2.7m) CORD	CEE 7/7 PLUG RATED 250V 9 FT. (2.7m) CORD	CH2-16P PLUG RATED 250V 8 FT. (2.5m) CORD	BS1363 PLUG RATED 250V 8 FT. (2.5m) CORD
100-HW/D4, /D6									
120V	5.0	0.6	✓						
208V 240V	2.2 2.5	0.5 0.6				✓			
230V	2.6	0.6					✓	✓	✓
100-HW/D443, /D643									
120V	6.8	0.8	✓						
208V 240V	2.9 3.4	0.6 0.8				✓			
230V	3.5	0.8					✓	✓	✓
200-HW/D4, /D6 & 200-HWI/D4, /D6, 200-HWIS/D6									
120V	10.0	1.2	✓						
208V 240V	4.3 5.0	0.9 1.2				✓			
230V	5.2	1.2					✓	✓	✓
200-HW/D443, /D643 & 200-HWI/D443, /D643									
120V	13.5	1.6		✓					
208V 240V	5.8 6.8	1.2 1.6				✓			
230V	6.5	1.6					✓	✓	✓
300-HW/D4, /D6, 300-HWLF/D4, /D6, 300-HWI/D4, /D6, & 300-HWILF/D4, /D6, 300-HWIS/D6									
120V	15.0	1.8		✓					
208V 240V	6.5 7.5	1.4 1.8				✓			
230V	7.8	1.8					✓	✓	✓
300-HW/D443, /D643 & 300-HWI/D443, /D643									
120V	20.3	2.4			✓				
208V 240V	8.8 10.1	1.8 2.4				✓			
230V	10.6	2.4					✓	✓	✓
400-HW/D4, /D6, 400-HWLF/D4, /D6, 400-HWI/D4, /D6, & 400-HWILF/D4, /D6									
120V	20.0	2.4			✓				
208V 240V	8.7 10.0	1.8 2.4				✓			
230V	10.4	2.4					✓	✓	✓
500-HW/D4, /D6, 500-HWLF/D4, /D6, 500-HWI/D4, /D6, & 500-HWILF/D4, /D6									
120V	25.0	3.0			✓				
208V 240V	10.8 12.5	2.3 3.0				✓			
230V	13.0	3.0					✓	✓	✓

Other plugs are available. Contact factory for more information.

⚠ CAUTION

To prevent **personal injury** or **property damage**:

Always use hand protection when operating this appliance to avoid burns. Metal parts of this equipment become extremely hot when in operation.

1. Do not add water to hot well

Adding water to the hot well will void the warranty.

2. Place pan dividers and empty pans in the wells

NOTICE: No matter what type of pan configuration chosen, pan separator bars or divider bars must be used to close all gaps between pans, and all gaps between the pans and the edges of the wells. If these gaps are not closed, heat will escape, heat distribution will be uneven, and uniform temperature will be difficult to maintain. **This is a <u>VERY</u> important requirement to follow whenever this appliance is in use.**

3. Preheat

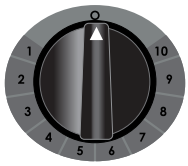

A preheat step is built into the control. When knob is turned to desired setting the appliance will automatically preheat for a predetermined time and then begins to cycle on and off based on the setting selected. The pilot light (green) is "on" whenever the dial is turned to a number.

4. Load hot foods into the appliance

After preheating, place hot foods into the preheated pans located in the appliance or exchange the pans with pre-filled product pans. This appliance is designed for the purpose of hot food holding. Only hot foods should be placed into the appliance. Potentially hazardous foods should be held in the appliance at setting 10. If lower settings are used, ensure the food has maintained safe food temperatures. Lower settings should be tested by user to ensure food has maintained safe food temperatures between 140° and 160°F (60° and 71°C).

All pan divider bars required must be utilized at all times with the pan configuration chosen. Before loading food into the appliance, use a pocket-type thermometer to make certain all products have reached an internal temperature of 140° to 180°F (60° to 82°C). If any food product is not at proper serving temperature, use a Halo Heat cooking and holding oven, set at 250° to 275°F (121° to 135°C), or a Combitherm oven to bring the product within the correct temperature range.

5. Reset thermostat(s) as needed

After all products are loaded into the appliance, it is necessary to reset the thermostat(s). Since proper temperature range depends on the type of products and the quantities being held, it is necessary to periodically use a pocket thermometer to check each item to make certain the correct temperatures are being maintained. Proper temperature range is between a minimum of 140° and 180°F (60° and 82°C).

NOTICE: Some foods may require additional overhead heating. Always monitor the food temperature and add overhead heating when needed.

6. Serve fresh, hot food

Keep hot foods looking fresh. Occasionally stir or rotate food as needed. Wipe spills immediately to ensure maximum eye appeal and to ease end of day cleanup.

General Holding Guidelines

Chefs, cooks and other specialized food service personnel employ varied methods of cooking. Proper holding temperatures for a specific food product must be based on the moisture content of the product, product density, volume, and proper serving temperatures. Safe holding temperatures must also be correlated with palatability in determining the length of holding time for a specific product.

Halo Heat maintains the maximum amount of product moisture content without the addition of water, water vapor, or steam. Maintaining maximum natural product moisture preserves the natural flavor of the product and provides a more genuine taste. In addition to product moisture retention, the gentle properties of Halo Heat maintain a consistent temperature throughout the cabinet without the necessity of a heat distribution fan, thereby preventing further moisture loss due to evaporation or dehydration.

When product is removed from a high temperature cooking environment for immediate transfer into equipment with the lower temperature required for hot food holding, condensation can form on the outside of the product and on the inside of plastic containers used in self-service applications. Allowing the product to release the initial steam and heat produced by high temperature cooking can alleviate this condition. To preserve the safety and quality of freshly cooked foods however, a maximum of 1 to 2 minutes must be the only time period allowed for the initial heat to be released from the product.

Most Halo Heat holding equipment is provided with a thermostat control between 60° and 200°F (16° to 93°C). If the appliance is equipped with vents, close the vents for moist holding and open the vents for crisp holding.

If the appliance is equipped with a thermostat indicating a range of between 1 and 10, use a metal-stemmed indicating thermometer to measure the internal temperature of the product(s) being held. Adjust the thermostat setting to achieve the best overall setting based on internal product temperature.

Holding Temperature Range		
Meat	**Fahrenheit**	**Celsius**
Beef Roast — Rare	130°F	54°C
Beef Roast — Med/Well Done	155°F	68°C
Beef Brisket	160°F–175°F	71°C–79°C
Corn Beef	160°F–175°F	71°C–79°C
Pastrami	160°F–175°F	71°C–79°C
Prime Rib — Rare	130°F	54°C
Steaks — Broiled/Fried	140°F–160°F	60°C–71°C
Ribs — Beef Or Pork	160°F	71°C
Veal	160°F–175°F	71°C–79°C
Ham	160°F–175°F	71°C–79°C
Pork	160°F–175°F	71°C–79°C
Lamb	160°F–175°F	71°C–79°C
Poultry		
Chicken — Fried/Baked	160°F–175°F	71°C–79°C
Duck	160°F–175°F	71°C–79°C
Turkey	160°F–175°F	71°C–79°C
General	160°F–175°F	71°C–79°C
Fish/Seafood		
Fish — Baked/Fried	160°F–175°F	71°C–79°C
Lobster	160°F–175°F	71°C–79°C
Shrimp — Fried	160°F–175°F	71°C–79°C
Baked Goods		
Breads/Rolls	120°F–140°F	49°C–60°C
Miscellaneous		
Casseroles	160°F–175°F	71°C–79°C
Dough — Proofing	80°F–100°F	27°C–38°C
Eggs — Fried	150°F–160°F	66°C–71°C
Frozen Entrees	160°F–175°F	71°C–79°C
Hors d'oeuvres	160°F–180°F	71°C–82°C
Pasta	160°F–180°F	71°C–82°C
Pizza	160°F–180°F	71°C–82°C
Potatoes	180°F	82°C
Plated Meals	140°F–165°F	60°C–74°C
Sauces	140°F–200°F	60°C–93°C
Soup	140°F–200°F	60°C–93°C
Vegetables	160°F–175°F	71°C–79°C

The holding temperatures listed are suggested guidelines only. All food holding should be based on internal product temperatures. Always follow local health (hygiene) regulations for all internal temperature requirements.

Protecting Stainless Steel Surfaces

It is important to guard against corrosion in the care of stainless steel surfaces. Harsh, corrosive, or inappropriate chemicals can completely destroy the protective surface layer of stainless steel. Abrasive pads, steel wool, or metal implements will abrade surfaces causing damage to this protective coating and will eventually result in areas of corrosion. Even water, particularly hard water that contains high to moderate concentrations of chloride, will cause oxidation and pitting that result in rust and corrosion. In addition, many acidic foods spilled and left to remain on metal surfaces are contributing factors that will corrode surfaces.

Proper cleaning agents, materials, and methods are vital to maintaining the appearance and life of this appliance. Spilled foods should be removed and the area wiped as soon as possible but at the very least, a minimum of once per day. Always thoroughly rinse surfaces after using a cleaning agent and wipe standing water as quickly as possible after rinsing.

Cleaning Agents

Use non-abrasive cleaning products designed for use on stainless steel surfaces. Cleaning agents must be chloride-free compounds and must not contain quaternary salts. Never use hydrochloric acid (muriatic acid) on stainless steel surfaces. Failure to observe this precaution will void the warranty. Always use the proper cleaning agent at the manufacturer's recommended strength. Contact your local cleaning supplier for product recommendations.

Cleaning Materials

Cleaning can usually be accomplished with the proper cleaning agent and a soft, clean cloth. When more aggressive methods are needed, use a non-abrasive scouring pad on difficult areas and make certain to scrub with the visible grain of surface metal to avoid surface scratches. Never use wire brushes, metal scouring pads, or scrapers to remove food residue. Failure to observe this precaution will void the warranty.

NOTICE

To protect stainless steel surfaces, completely avoid the use of abrasive cleaning compounds, chloride based cleaners, or cleaners containing quaternary salts. **Never** use hydrochloric acid (muriatic acid) on stainless steel. **Never** use wire brushes, metal scouring pads or scrapers.

WARNING

To prevent **SERIOUS PERSONAL INJURY**, **DEATH**, or **PROPERTY DAMAGE**:

If the appliance is not cleaned or is not cleaned well enough, deposits of grease and or food residues inside the appliance may catch fire. If fat deposits and/or food waste inside the appliance ignite disconnect the appliance from the main power and use a fire extinguisher (do not use water to extinguish a grease fire!). Failure to clean the appliance properly may cause fire, personal injury, death, invalidates the warranty and relieves Alto-Shaam of all liability.

⚠ WARNING

To prevent serious personal injury, death, or property damage:

Do not steam clean, hose down or flood the interior or exterior with water or liquid solution of any kind. **Do not** use water jet to clean. Failure to observe this precaution will void the warranty.

⚠ WARNING

To prevent serious injury, death, or property damage, **always** disconnect the appliance from the power source before cleaning or servicing.

Clean the Food Well daily

1. Disconnect hot well from the power source. Let appliance cool.
2. After the hot well has cooled, remove pan insert and clean separately.
3. Remove any food scraps.
4. Wipe the interior metal surfaces with a paper towel to remove any remaining food debris.
5. Clean interior with a damp cloth or sponge and any good commercial detergent at the recommended strength.

   NOTICE: Never use abrasive cleaning compounds, chloride-based cleaners, or cleaners containing quaternary salts. Never use hydrochloric acid (muriatic acid) on stainless steel.
6. For baked-on food deposits, use a non-caustic and non-toxic commercial oven cleaner appropriate for the interior surface. Follow the product manufacturer's instructions carefully for the use of this product. Any commercial oven cleaner must be approved for use on food contact areas. Remove soil with the use of a plastic scouring pad.
7. Rinse surfaces by wiping with a clean cloth or sponge and clean warm water.
8. Remove excess water with a sponge and wipe dry with a clean cloth or air dry. Leave area open until interior is completely dry. Replace pan insert.
9. Interior can be wiped with a sanitizing solution after cleaning and rinsing. This solution must be approved for use on stainless steel food contact surfaces.

Always follow appropriate state or local health (hygiene) regulations regarding all applicable cleaning and sanitation requirements for food service equipment.

Food flavor and aroma are usually so closely related that it is difficult, if not impossible, to separate them. There is also an important, inseparable relationship between cleanliness and food flavor. Cleanliness, operating efficiency, and appearance of equipment contribute considerably to savory, appetizing foods.

Most food imparts its own particular aroma and many foods also absorb existing odors. Unfortunately, during this absorption there is not a distinction between **good** and **bad** odors. The majority of objectionable flavors and odors troubling food service operations are caused by bacteria growth. Sourness, rancidity, mustiness, stale or other undesireable flavors are usually the result of germ activity.

The easiest way to ensure full, natural food flavor is through comprehensive cleanliness. This means good control of both visible soil (dirt) and invisible soil (germs). A thorough approach to sanitation will provide essential cleanliness. It will ensure an attractive appearance of equipment, along with maximum efficiency and utility. More importantly, a good sanitation program provides one of the key elements in the prevention of food-borne illnesses.

A comprehensive sanitation program should focus on the training of staff in basic sanitation procedures. This includes personal hygiene, proper handling of raw foods, cooking to a safe internal product temperature, and the routine monitoring of internal food temperatures from the time the food is received through the time the food is served.

A controlled holding environment for prepared foods is just one of the important factors involved in the prevention of food-borne illnesses. Temperature monitoring and control during receiving, storage, preparation, and the service of foods are of equal importance.

The most accurate method of measuring safe temperatures of both hot and cold foods is by internal product temperature. A thermometer is an effective tool for this purpose, and should be routinely used on all products that require holding at a specific temperature.

Internal Food Product Temperatures		
Hot Foods		
Danger Zone	40°F to 140°F	4°C to 60°C
Critical Zone	70°F to 120°F	21°C to 49°C
Safe Zone	140°F to 165°F	60°C to 74°C
Cold Foods		
Danger Zone	Above 40°F	Above 4°C
Safe Zone	36°F to 40°F	2°C to 4°C
Frozen Foods		
Danger Zone	Above 32°F	Above 0°C
Critical Zone	0°F to 32°F	-18°C to 0°C
Safe Zone	0°F or Below	-18°C or Below

Hazard Analysis (at) Critical Control Points (HACCP), is a quality control program of operating procedures to assure food integrity, quality, and safety. Taking steps necessary to augment food safety practices is both cost effective and relatively simple. Additional HACCP information is available by contacting:

Center for Food Safety and Applied Nutrition
Food and Drug Administration
Phone: 1-888-SAFEFOOD
www.foodsafety.gov

100-HW Control Service View

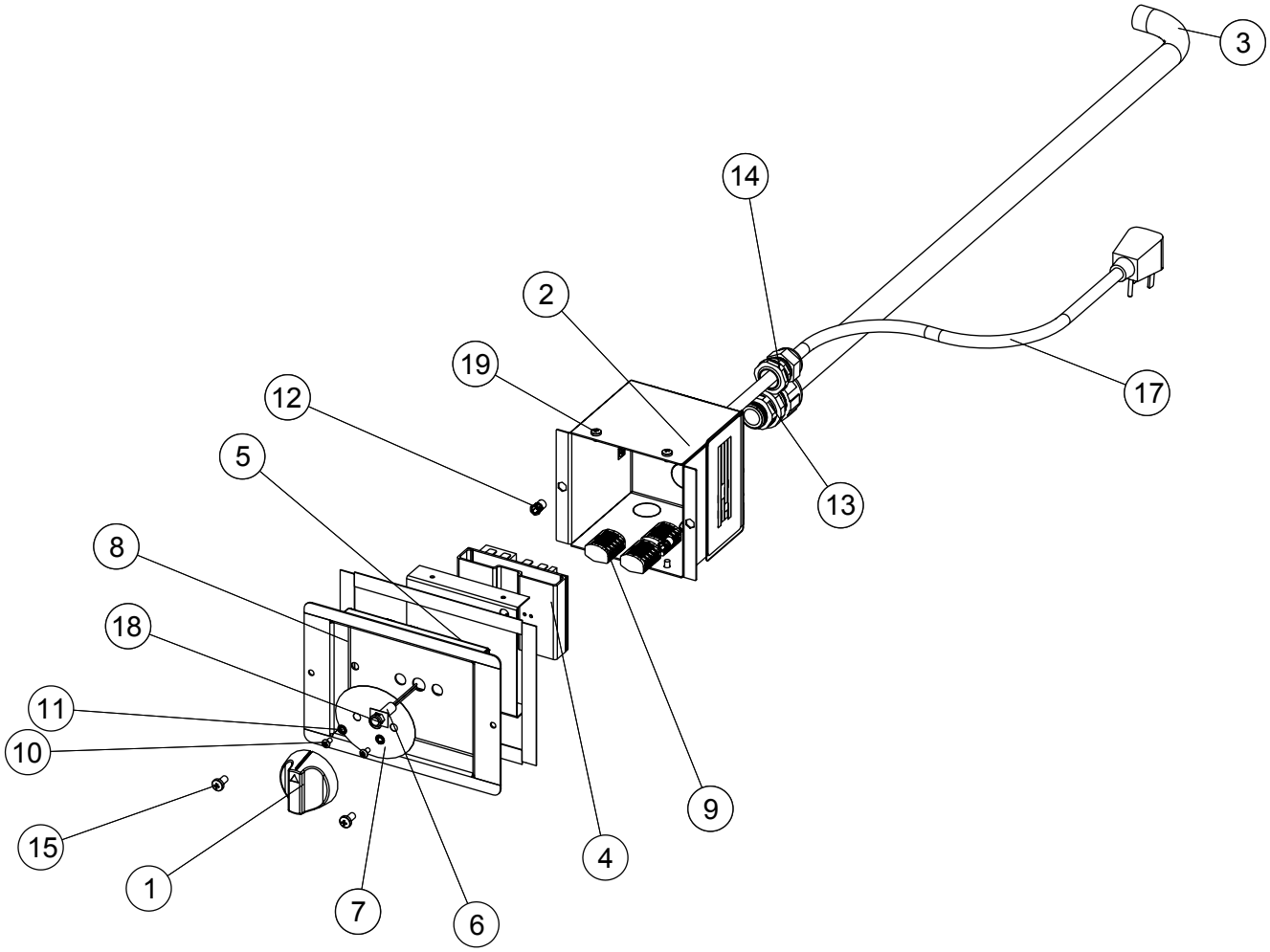

Item	Part	Description	Qty
1	KN-36424	KNOB, T-STAT CONTROL	1
2	1015723	SHELL, CONTROL POD, 1 KNOB	1
3	TU-33178	CONDUIT, FLEXIBLE, 6 FT	1
4	CC-36859	CONTROL	1
5	1017287	PLATE, FACE	1
6	LI-37215	LIGHT, INDICATOR	1
7	PE-36566	PANEL OVERLAY, CONTROL	1
8	TA-24637	TAPE, VHB, FOAM, 1/2" WIDE	1
9	CR-34646	CONNECTOR-5 CONDUCTOR	3
10	SC-22500	SCREW 6-32 x 1/4" PAN HD	2
11	WS-2768	WASHER, #6, LOCK	2
12	NU-23909	NUT, HEX INSERT M5	2

Item	Part	Description	Qty
13	BU-34606	BUSHING, STRAIGHT, STRAIN RELIEF	1
14	BU-3964	BUSHING, STRAIGHT, STRAIN RELIEF	1
15	SC-22766	SCREW, M5 x 0.8 x 10mm PAN	2
17	CD-3232	CORDSET, 14/3 SJTOW, 125V	1
	5014997*	CORDSET, BS 1363 FERRULE ASSB	1
	5016998	CORDSET, CH2-16P FERRULE ASSB	1
	CD-33840	CORDSET, 15A, 208-240V	1
	CD-3922	CORDSET, 16AWG, 3/C, INT'L HARM	1
18	CL-37245	CLIP, LIGHT MOUNTING	1
19	SC-22271	SCREW, M4 x 0.7 x 6mm PAN	4

*Use cord strain relief bushing BU-3964

Part numbers and drawings are subject to change without notice.

100-HW Exterior Service View

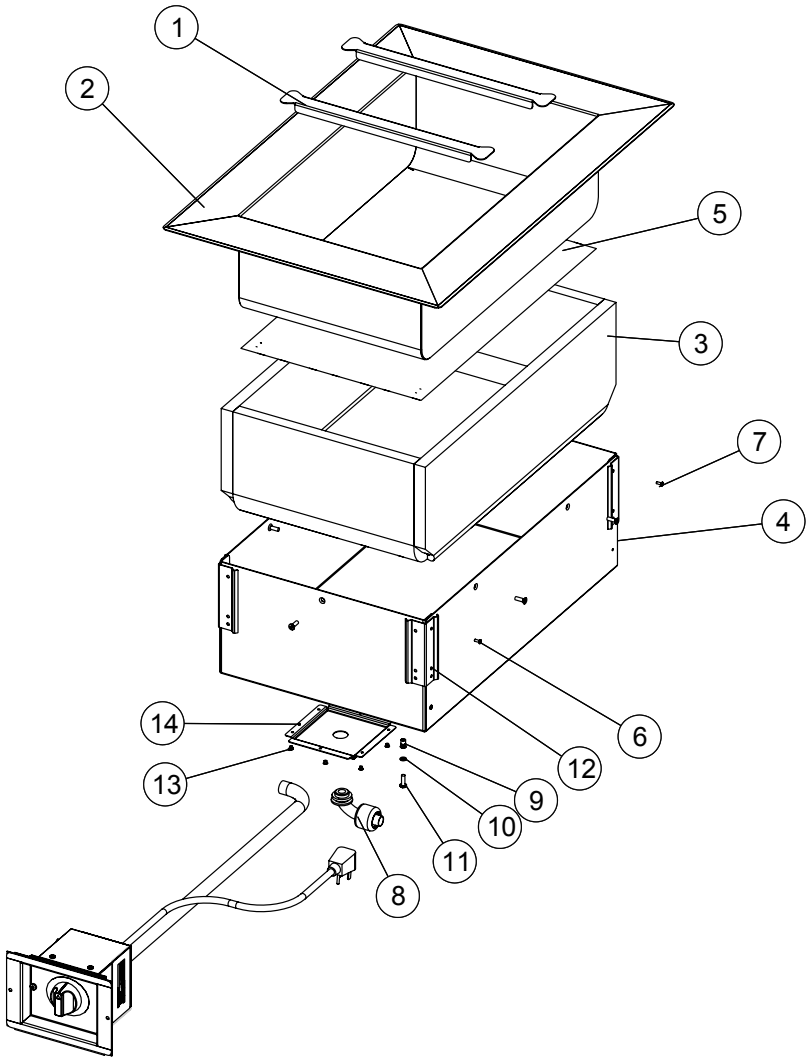

Item	Part	Description	Qty
1	11318	DIVIDER, PAN, SHORT	2
2	5017271	WELDMENT, D6, STD FLANGE	1
	5017613	WELDMENT, D4, STD FLANGE	1
	5017684	WELDMENT, D643, STD FLANGE	1
	5017703	WELDMENT, D6, WIDE FLANGE	1
	5017708	WELDMENT, D4, WIDE FLANGE	1
	5018740	WELL SPOT, D443, STD FLANGE	1
3	IN-24588	INSULATION	1
4	1015827	WRAPPER, 1 WELL, 6" DEEP	1
	1016193	WRAPPER, 1 WELL, 4" DEEP	1
	1016204	WRAPPER, 1 WELL, 6" DEEP, 4/3 MODEL	1
	1016200	WRAPPER, 1 WELL, 4" DEEP, 4/3 MODEL	1

Item	Part	Description	Qty
5	EL-36317	ELEMENT, HEATING PAD	1
	EL-36860	ELEMENT, HEATING PAD, 4/3 MODEL	1
6	RI-27108	RIVET, SEALED	8
7	SC-22281	SCREW, M5 x 0.8 x 16mm FLAT	6
8	CR-33179	CONNECTOR FLEX NYLON SWEEP	1
9	NU-23909	NUT, HEX INSERT M5	1
10	WS-22301	WASHER, M5 SPLIT LOCK	1
11	SC-36973	SCREW, PAN PH, METRIC, M5	1
12	1017049	BRACKET, STANDOFF, 230V ONLY	4
13	RI-2097	RIVET, #42 STAINLESS	6
14	1018416	PANEL, COVER, WELL CONNECTION	1

Part numbers and drawings are subject to change without notice.

200-HW Control Service View

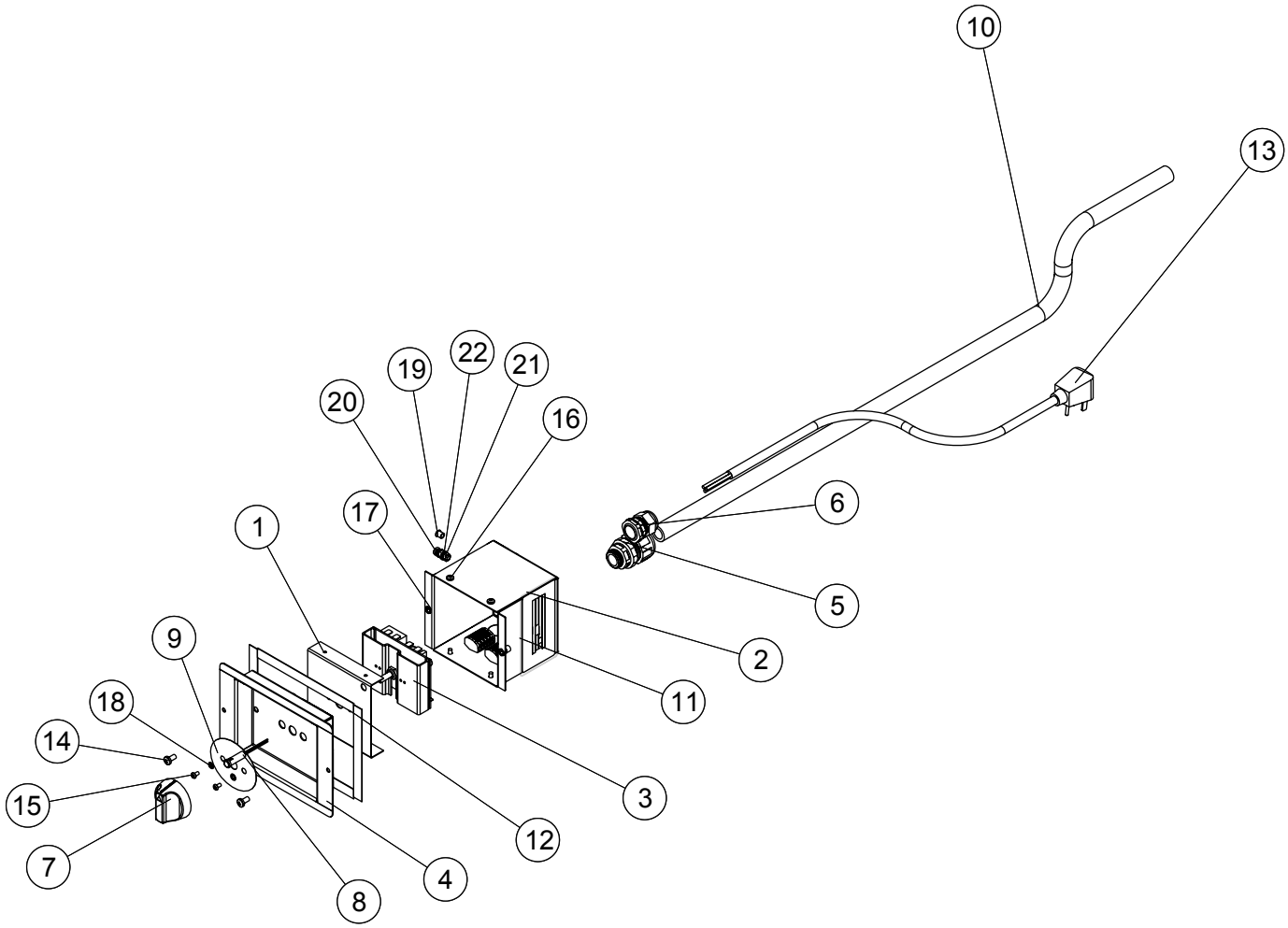

Item	Part	Description	Qty
1	1017287	PLATE, FACE	1
2	1017303	SHELL, CONTROL POD	1
3	CC-36859	CONTROL	1
4	1015805	BOX, REMOTE, DECOR FACE, 1 KNOB	1
5	BU-34606	BUSHING, STRAIGHT, STRAIN RELIEF	1
6	BU-3964	BUSHING, STRAIGHT, STRAIN RELIEF	1
7	KN-36424	KNOB, T-STAT CONTROL	1
8	LI-37215	LIGHT, INDICATOR	1
9	PE-36566	PANEL OVERLAY	1
10	TU-33178	CONDUIT FLEX LIQUID TIGHT, 3'	1
11	CR-34646	CONNECTOR-5 CONDUCTOR	3
12	TA-24637	TAPE, VHB, FOAM, 1/2"	4
13	CD-3232	CORDSET, 14/3 SJTOW, 125V	1
	5014997*	CORDSET, BS 1363 FERRULE ASSB	1

*Use cord strain relief bushing BU-3964

Item	Part	Description	Qty
	5016998	CORDSET, CH2-16P FERRULE ASSB	1
	CD-33840	CORDSET, 15A, 208-240V	1
	CD-3922	CORDSET, 16AWG, 3/C, INT'L HARM	1
14	SC-22766	SCREW, M5 x 0.8 x 10mm PAN	2
15	SC-22500	SCREW 6-32 X 1/4" PAN HD	2
16	SC-22271	SCREW, M4 x 0.7 x 6mm PAN	4
17	NU-23909	NUT, HEX INSERT M5	2
18	WS-2768	WASHER, #6, LOCK	2
19	PG-35411	PLUG, 1/4" HOLE	1
20	SC-22926	SCREW, M5 x 0.8 x 16mm HEX	1
21	NU-36234	NUT, M5, KEPS	2
22	WS-22295	WASHER, FLAT M5 S/S	1

Part numbers and drawings are subject to change without notice.

200-HW Exterior Service View

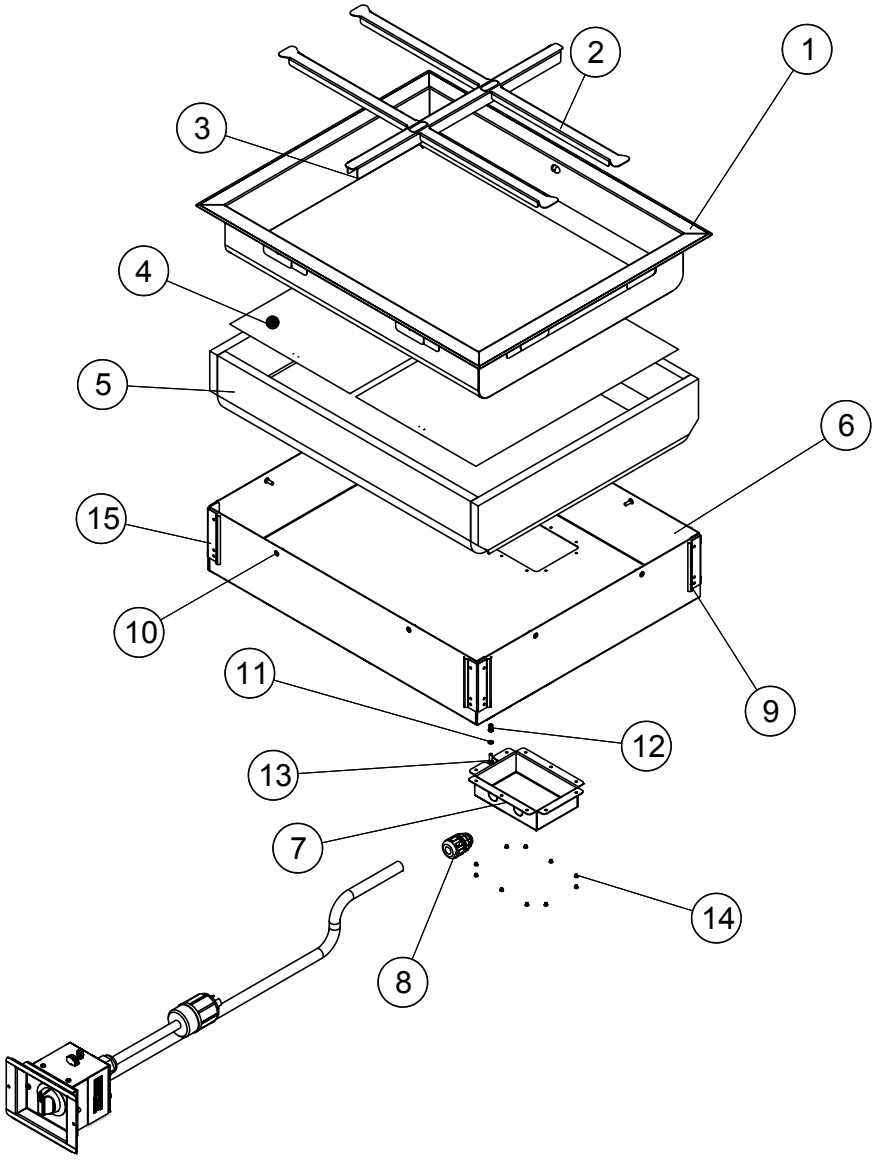

Item	Part	Description	Qty
1	5018588	WELL, D4, STD	1
	5018589	WELL, D6, STD FLANGE	1
	5018590	WELL, D4, WIDE FLANGE	1
	5018591	WELL, D6, WIDE FLANGE	1
	5018695	WELL, D443, STD FLANGE	1
	5018696	WELL, D643, STD FLANGE	1
2	11318	DIVIDER, PAN, SHORT	4
3	16019	DIVIDER, PAN	1
4	EL-36317	ELEMENT, HEATING PAD	2
	EL-36860	ELEMENT, HEATING PAD, 4/3 MODEL	1
5	IN-24588	INSULATION	1
6	1015828	WRAPPER, 2 WELL, 6" DP	1
	1016194	WRAPPER, 2 WELL, 4" DP	1

Item	Part	Description	Qty
	1017333	WRAPPER, 2 WELL, 6" DP, 4/3 MODEL	1
	1017334	WRAPPER, 2 WELL, 4" DP, 4/3 MODEL	1
7	1016034	BOX, CONNECTION	1
8	BU-34606	BUSHING, STRAIGHT, STRAIN RELIEF	1
9	RI-27108	RIVET, SEALED	8
10	SC-22281	SCREW, M5 x 0.8 x 16mm FLAT	8
11	WS-22301	WASHER, M5 SPLIT LOCK	1
12	NU-23909	NUT, HEX INSERT M5	1
13	SC-36973	SCREW, PAN PH, METRIC, M5	1
14	RI-2097	RIVET, #42 STAINLESS	10
15	1017049	BRACKET, STANDOFF, 230V ONLY	4

Part numbers and drawings are subject to change without notice.

200-HWI, 200-HWIS Control Service View

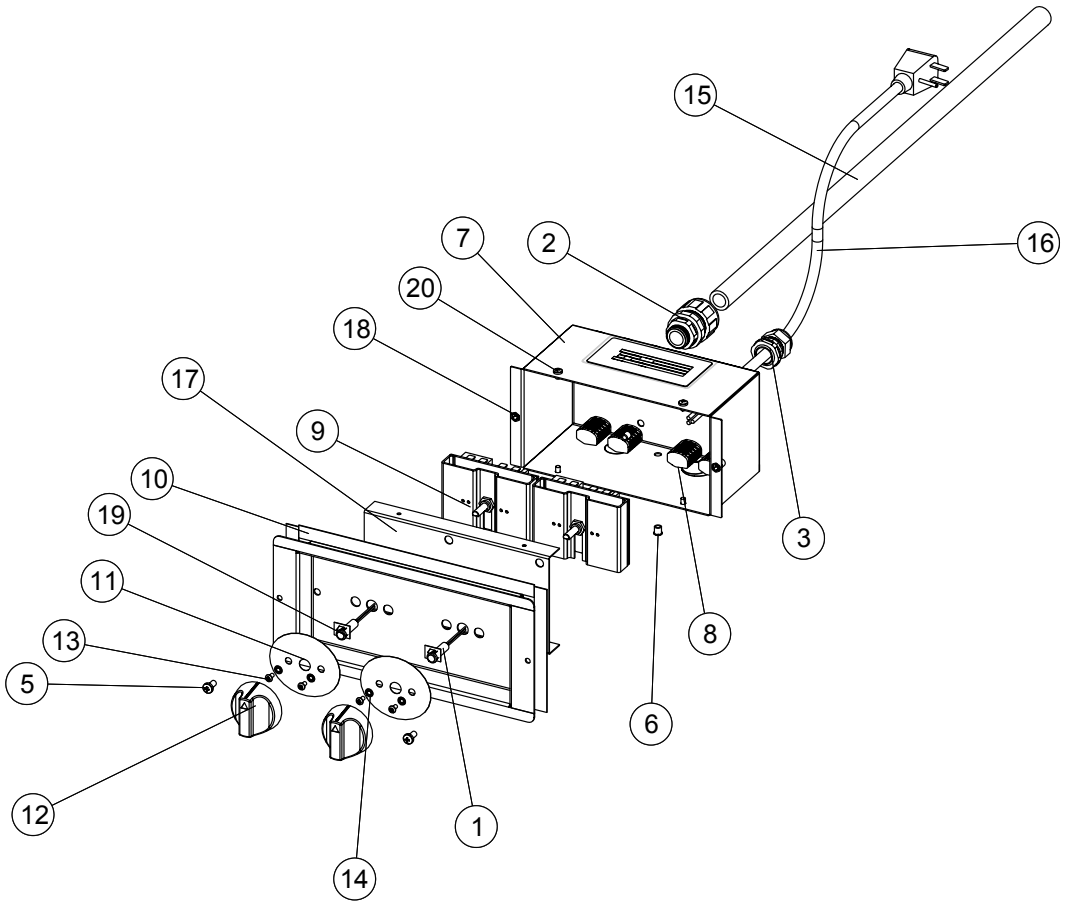

Item	Part	Description	Qty
1	LI-37215	LIGHT, INDICATOR	2
2	BU-34606	BUSHING, STRAIGHT, STRAIN RELIEF	1
3	BU-3964	BUSHING, STRAIGHT, STRAIN RELIEF	1
5	SC-22766	SCREW, M5 x 0.8 x 10mm PAN	2
6	PG-35411	PLUG, 1/4" HOLE	1
7	1015724	SHELL, CONTROL POD, 2 KNOB	1
8	CR-34646	CONNECTOR-5 CONDUCTOR	4
9	CC-36859	CONTROL	2
10	TA-24637	TAPE, VHB, FOAM, 1/2" x 9.4"	1
11	PE-36566	PANEL OVERLAY	2
12	KN-36424	KNOB, T-STAT CONTROL	2
13	SC-22500	SCREW, 6-32 x 1/4" PAN HEAD	4

Item	Part	Description	Qty
14	WS-2768	WASHER, #6, LOCKING SS	4
15	TU-33178	CONDUIT FLEX LIQUID TIGHT	1
16	5014997*	CORDSET, BS 1363 FERRULE ASSEMBLY	1
	5016998	CORDSET, CH2-16P FERRULE ASSEMBLY	1
	CD-33840	CORDSET, 15A, 208-240V	1
	CD-3922	CORDSET, 16AWG, 3/C, INT'L HARM	1
	CD-3232	CORDSET, 14/3 SJTOW, 125V	1
17	1017288	PLATE, FACE	1
18	NU-23909	NUT, HEX INSERT M5	2
19	CL-37245	CLIP, LIGHT MOUNTING	2
20	SC-22271	SCREW, M4 x 0.7 x 6mm PAN	4

*Use cord strain relief bushing BU-3964

Part numbers and drawings are subject to change without notice.

200-HWI Exterior Service View

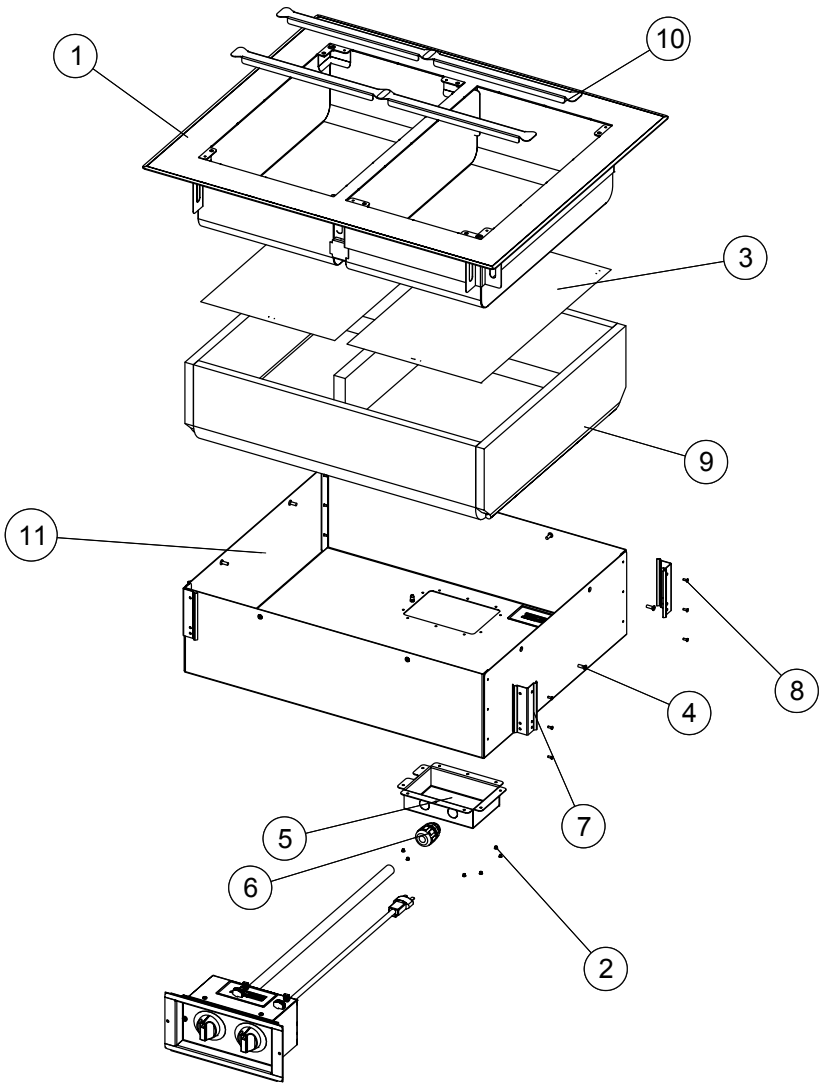

Item	Part	Description	Qty
1	5017704	WELDMENT, D6, WIDE FLANGE	1
	5017612	WELDMENT, D6, STD FLANGE	1
	5017709	WELDMENT, D4, WIDE FLANGE	1
	5017614	WELDMENT, D6, WIDE FLANGE	1
	5018690	WELDMENT, D643, STD FLANGE	1
	5018691	WELDMENT, D443, STD FLANGE	1
2	RI-2097	RIVET, #42 STAINLESS	10
3	EL-36317	ELEMENT, FOIL HEATING PAD	2
	EL-36860	ELEMENT, HEATING PAD, 810W	2
4	SC-22281	SCREW, M5 x 0.8 x 16mm FLAT	6
5	1016034	BOX, CONNECTION	1

Item	Part	Description	Qty
6	BU-34606	BUSHING, STRAIGHT, STRAIN RELIEF	1
7	1017049	BRACKET, STANDOFF, 230V ONLY	4
8	RI-27108	RIVET, SEALED	12
9	IN-24588	INSULATION	1
10	11318	DIVIDER, PAN, SHORT	4
11	1015828	WRAPPER, 2 WELL, 6" DEEP	1
	1016194	WRAPPER, 2 WELL, 4" DEEP	1
	1017333	WRAPPER, 2 WELL, 6" DEEP, 4/3 MODEL	1
	1017334	WRAPPER, 2 WELL, 4" DEEP, 4/3 MODEL	1

Part numbers and drawings are subject to change without notice.

200-HWIS Exterior Service View

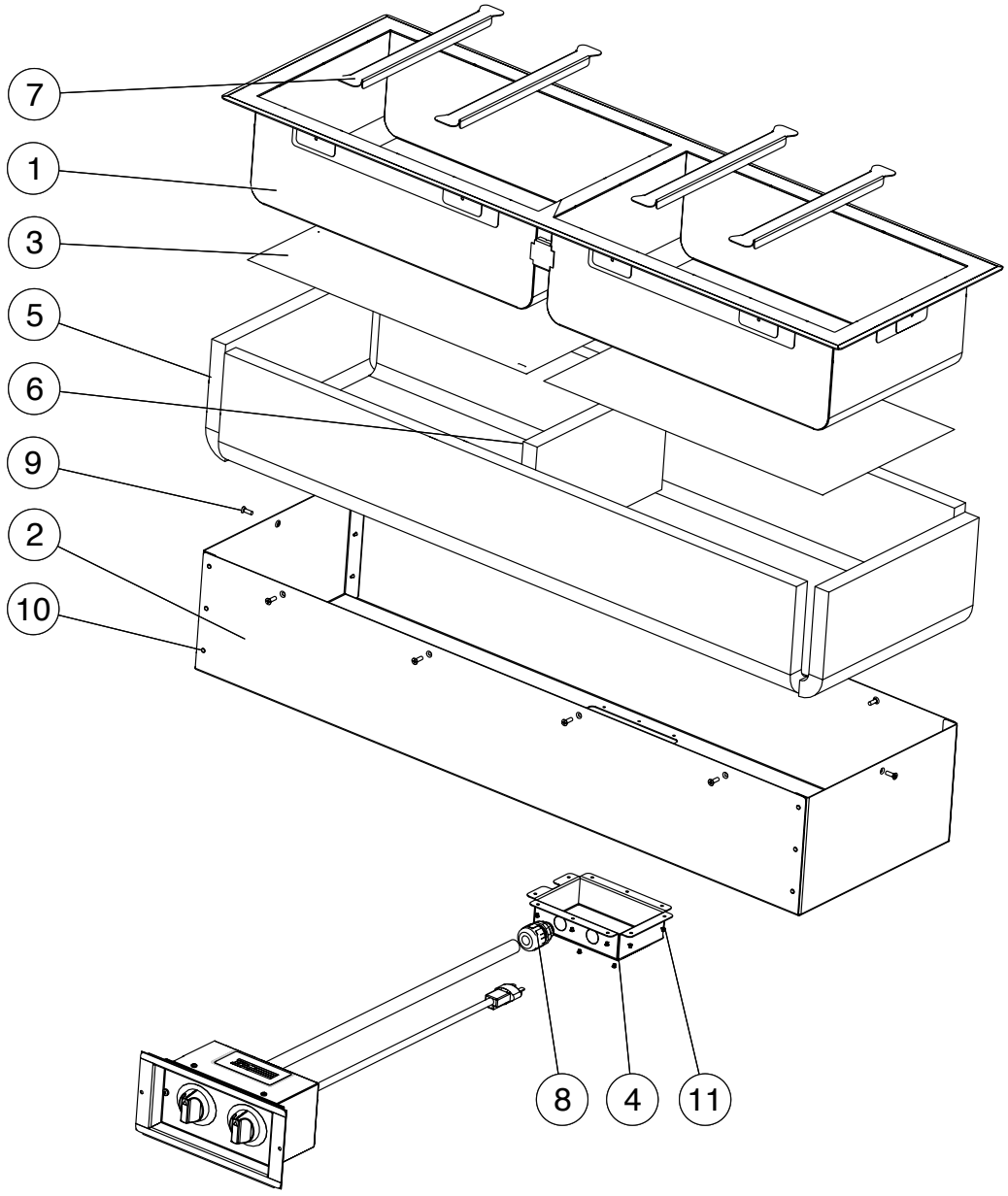

Item	Part	Description	Qty
1	5020440	WELDMENT	1
2	1018726	WRAPPER, 2 WELL	1
3	EL-36317	ELEMENT, FOIL HEATING PAD	2
4	5019797	CONNECTION BOX ASSEMBLY	1
5	1018725	INSULATION, WELL OUTSIDE	1
6	1018719	INSULATION, 11.875" x 6.38"	1

Item	Part	Description	Qty
7	11318	PAN DIVIDER, SHORT	4
8	BU-34606	BUSHING, STRAIGHT, STRAIN RELIEF	1
9	SC-22281	SCREW, M5 x 0.8 x 16mm FLAT	10
10	RI-27108	RIVET, SEALED	12
11	RI-2097	RIVET, #42 STAINLESS	13

Part numbers and drawings are subject to change without notice.

300-HW Control Service View

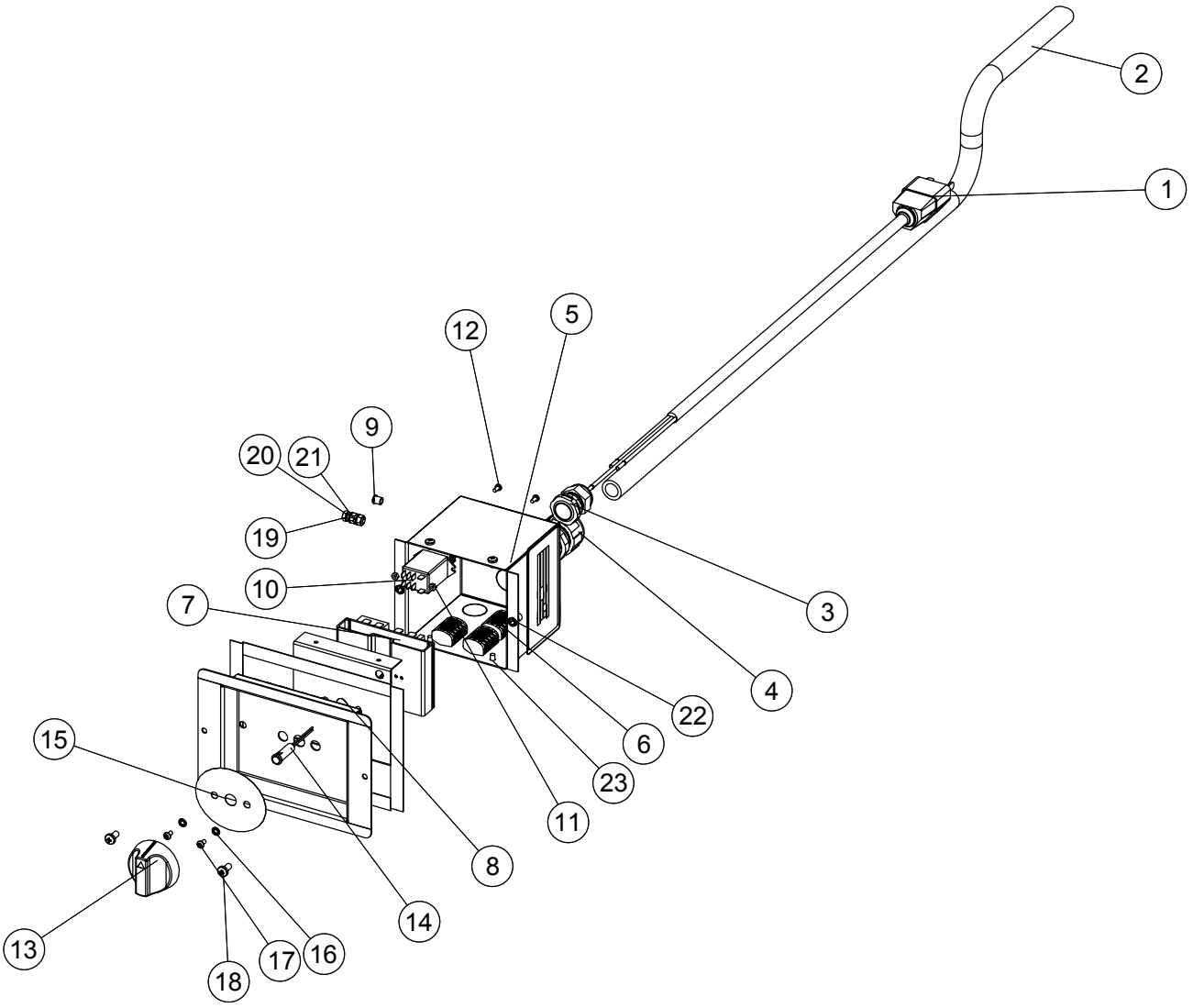

Item	Part	Description	Qty
1	5014997*	CORDSET, BS 1363 FERRULE ASSB	1
	5016998	CORDSET, CH2-16P FERRULE ASSB	1
	5017529	CORDSET, NEMA 5-20P FERRULE ASSB	1
	CD-33840	CORDSET, 15A, 208-240V	1
	CD-3922	CORDSET, 16AWG, 3/C, INT'L HARM	1
2	TU-33178	CONDUIT FLEX LIQUID TIGHT, 3FT	1
3	BU-3964	BUSHING, STRAIGHT, STRAIN RELIEF	1
4	BU-34606	BUSHING, STRAIGHT, STRAIN RELIEF	1
5	1017312	SHELL, CONTROL POD, 1 KNOB	1
6	CR-34646	CONNECTOR-5 CONDUCTOR	3
7	CC-36859	CONTROL	1
8	1017287	PLATE, FACE	1
9	PG-35411	PLUG, 1/4" HOLE	1
10	RL-34279	RELAY, 120V	1

Item	Part	Description	Qty
11	NU-22285	NUT, M3-0.5 HEX NUT	2
12	SC-22266	SCREW, M3 x 0.5 x 6mm PAN	2
13	KN-36424	KNOB, T-STAT CONTROL	1
14	LI-37215	LIGHT, INDICATOR	1
15	PE-36566	PANEL OVERLAY	1
16	WS-2768	WASHER, #6, LOCK	2
17	SC-22500	SCREW 6-32 x 1/4" PAN	2
18	SC-22766	SCREW, M5 x 0.8 x 10mm PAN	2
19	SC-22926	SCREW, M5 x 0.8 x 16mm HEX	1
20	NU-36234	NUT, M5, KEPS	2
21	WS-22295	WASHER, FLAT M5 S/S	1
22	NU-23909	NUT, HEX INSERT M5	2
23	SC-22271	SCREW, M4 x 0.7 x 6mm PAN	4

*Use cord strain relief bushing BU-3964

Part numbers and drawings are subject to change without notice.

300-HW Exterior Service View

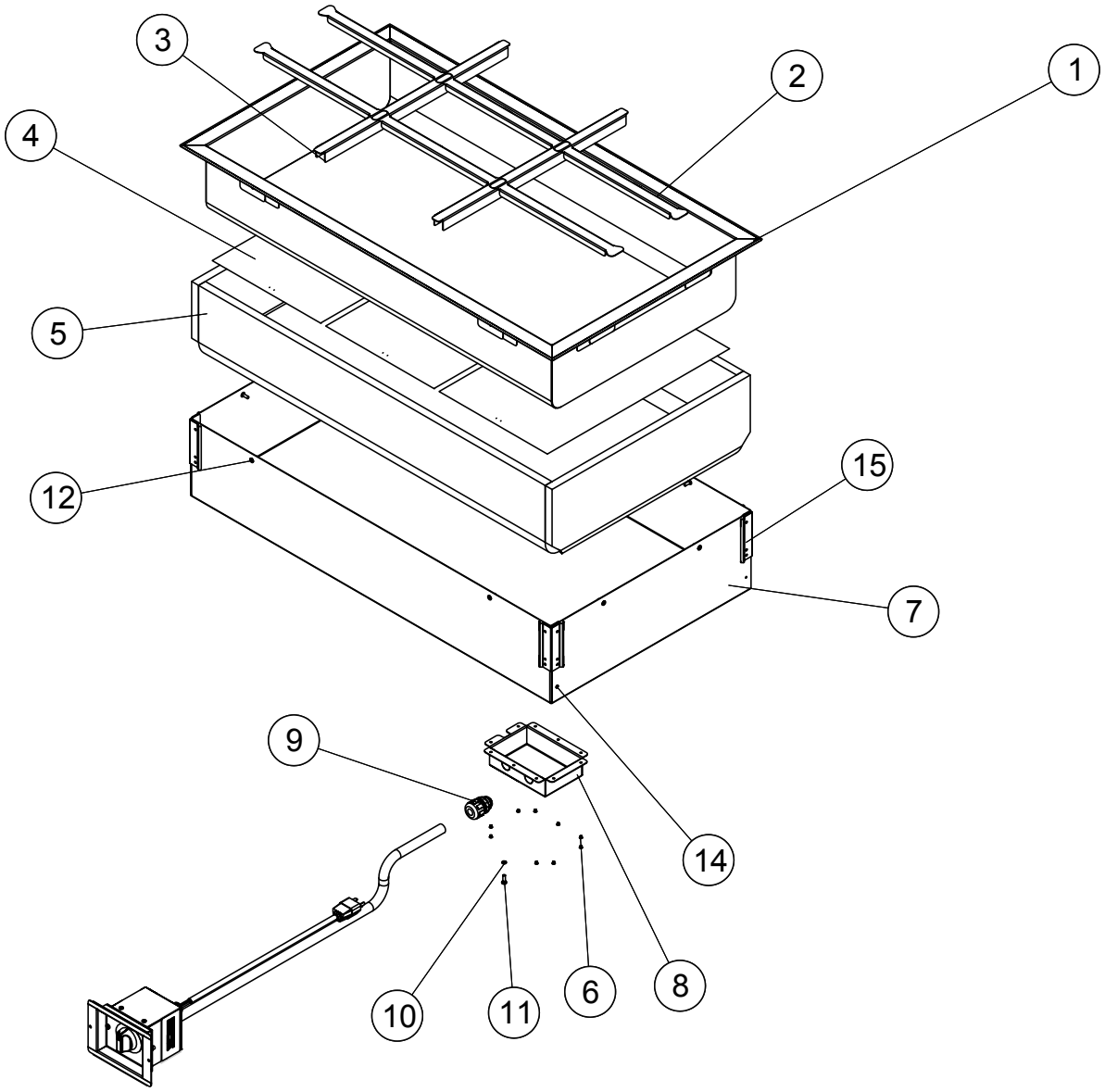

Item	Part	Description	Qty
1	5018554	WELL, D4, STD	1
	5018555	WELL, D6 STD	1
	5018556	WELL, D443 STD	1
	5018557	WELL, D643 STD	1
	5018558	WELL, D4 WIDE FLANGE	1
	5018559	WELL, D6, WIDE FLANGE	1
2	11318	PAN DIVIDER SHORT	6
3	16019	DIVIDER, PAN	2
4	EL-36317	ELEMENT, HEATING PAD	3
	EL-36860	ELEMENT, HEATING PAD, 4/3 MODEL	3
5	IN-24588	INSULATION	1
6	RI-2097	RIVET, #42 STAINLESS	10

Item	Part	Description	Qty
7	1015670	WRAPPER, 3 WELL, 6" DEEP	1
	1016195	WRAPPER, 3 WELL, 4" DEEP	1
	1016205	WRAPPER, 3 WELL, 6" DEEP, 4/3 MODEL	1
	1016207	WRAPPER, 3 WELL, 4" DEEP, 4/3 MODEL	1
8	1016034	BOX, CONNECTION	1
9	BU-34606	BUSHING, STRAIGHT, STRAIN RELIEF	1
10	WS-22301	WASHER, M5 SPLIT LOCK	1
11	SC-36973	SCREW, PAN PH, METRIC, M5	1
12	SC-22281	SCREW, M5 x 0.8 x 16mm FLAT	8
14	RI-27108	RIVET, SEALED	12
15	1017049	BRACKET, STANDOFF	4

Part numbers and drawings are subject to change without notice.

300-HWI, 300-HWIS Control Service View

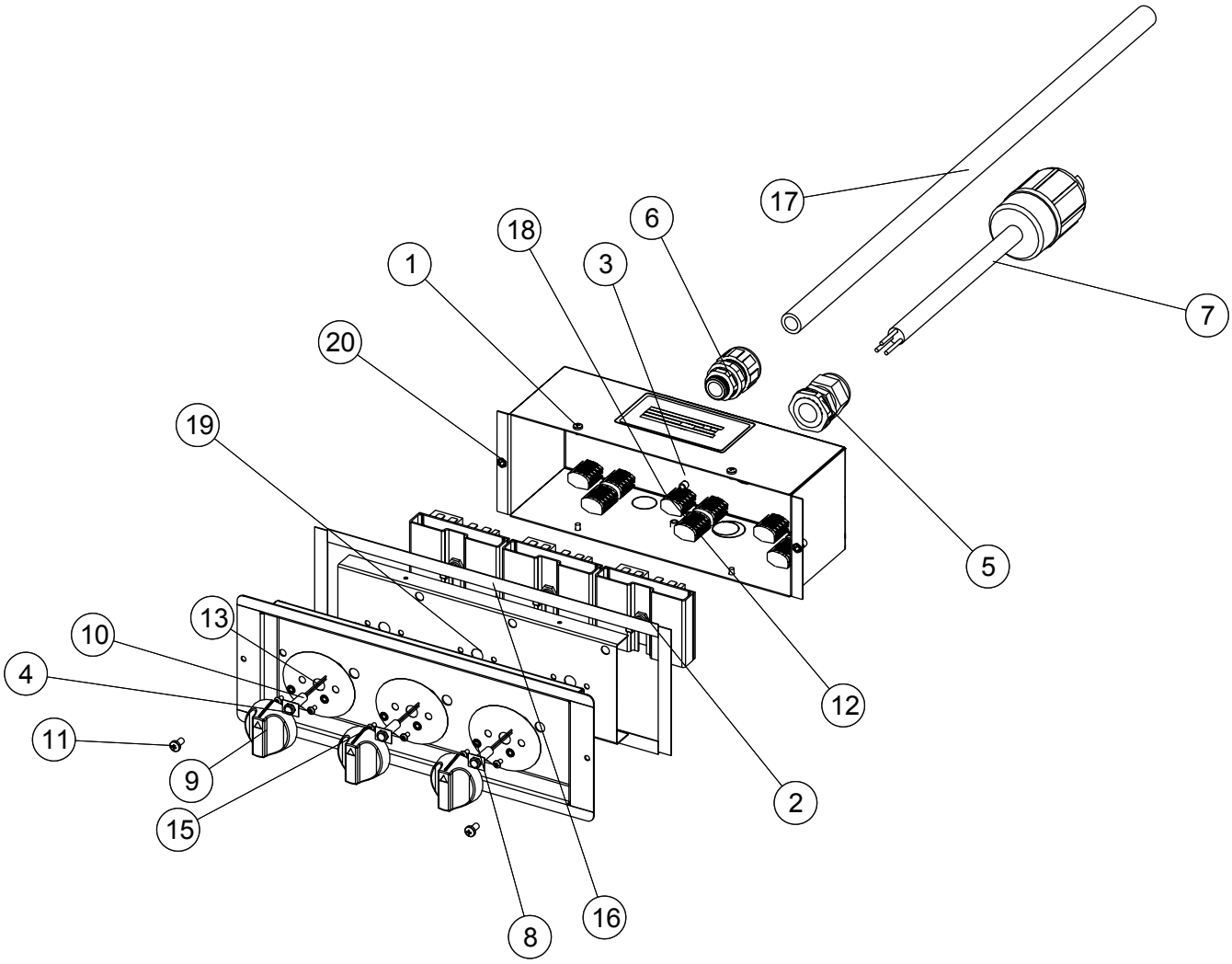

Item	Part	Description	Qty
1	SC-22271	SCREW, M4 x 0.7 x 6mm PAN	4
2	CC-36859	CONTROL	3
3	1015725	CONTROL POD SHELL	1
4	CL-37245	CLIP, LIGHT MOUNTING	3
5	BU-33505	BUSHING, STRAIN RELIEF	1
6	BU-34606	BUSHING, STRAIGHT, STRAIN RELIEF	1
7	CD-33366	CORDSET, 6' (1829mm), 125V, 30A, 10/3	1
	5014997*	CORDSET, BS 1363 FERRULE ASSB	1
	5016998	CORDSET, CH2-16P FERRULE ASSB	1
	CD-33840	CORDSET, 15A, 208-240V	1
	CD-3922	CORDSET, 16AWG, 3/C, INT'L HARM	1
8	WS-2768	WASHER, #6, LOCK, SS	6

Item	Part	Description	Qty
9	KN-36424	KNOB, T-STAT CONTROL	3
10	LI-37215	LIGHT, INDICATOR	3
11	SC-22766	SCREW, M5 x 0.8 x 10mm PAN	2
12	NU-36234	NUT, M5, KEPS	2
13	PE-36566	PANEL OVERLAY, CONTROL	3
15	SC-22500	SCREW, 6-32 x 1/4" PAN HEAD	6
16	TA-24637	TAPE, VHB, FOAM, 1/2" x 12.9"	1
17	TU-33178	CONDUIT FLEX LIQUID TIGHT	1
18	WS-22295	WASHER, FLAT M5 S/S	1
19	1017289	PLATE, FACE	1
20	NU-23909	NUT, HEX INSERT M5	2

*Use cord strain relief bushing BU-3964

Part numbers and drawings are subject to change without notice.

300-HWI Exterior Service View

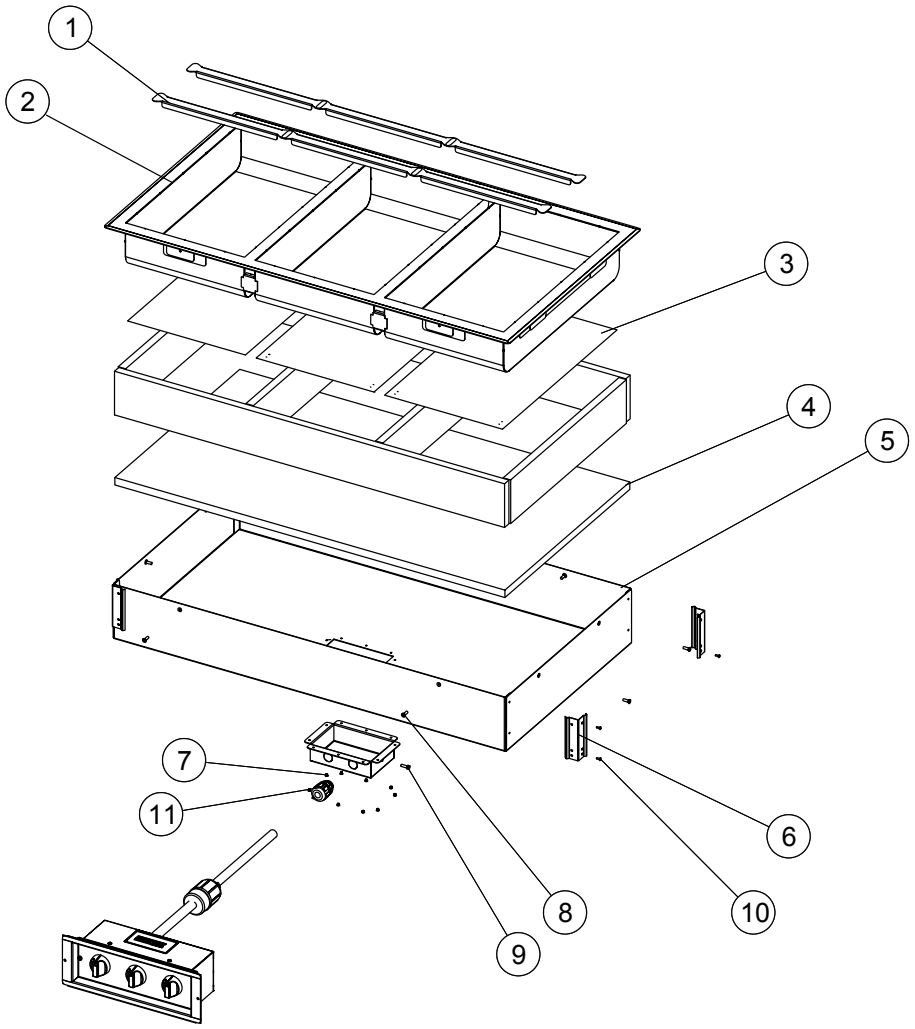

Item	Part	Description	Qty
1	11318	PAN DIVIDER, SHORT	6
2	5017216	WELDMENT, D6, STANDARD FLANGE	1
	5017615	WELDMENT, D4, STANDARD FLANGE	1
	5017692	WELDMENT, D643, STANDARD FLANGE	1
	5017696	WELDMENT, D443, STANDARD FLANGE	1
	5017705	WELDMENT, D6, LARGE FLANGE	1
	5017710	WELDMENT, D4, LARGE FLANGE	1
3	EL-36317	ELEMENT, FOIL HEATING PAD, 600W	3
	EL-36860	ELEMENT, FOIL HEATING PAD, 810W	3
4	IN-24588	INSULATION, 8# DENSITY, 39" x 22" x 1"	1
5	1015670	WRAPPER, 3 WELL, 6" DEEP	1

Item	Part	Description	Qty
	1016195	WRAPPER, 3 WELL, 4" DEEP	1
	1016205	WRAPPER, 3 WELL, 6" DEEP, 4/3 MODEL	1
	1016207	WRAPPER, 3 WELL, 4" DEEP, 4/3 MODEL	1
6	1017049	BRACKET, STANDOFF	4
7	RI-2097	RIVET, #42 STAINLESS	9
8	SC-22281	SCREW, M5 x 0.8 x 16mm FLAT	8
9	SC-22926	SCREW, M5 x 0.8 x 16mm HEX	1
10	RI-27108	RIVET, SEALED	8
11	BU-34606	BUSHING, STRAIGHT, STRAIN RELIEF	1

Part numbers and drawings are subject to change without notice.

300-HWIS Exterior Service View

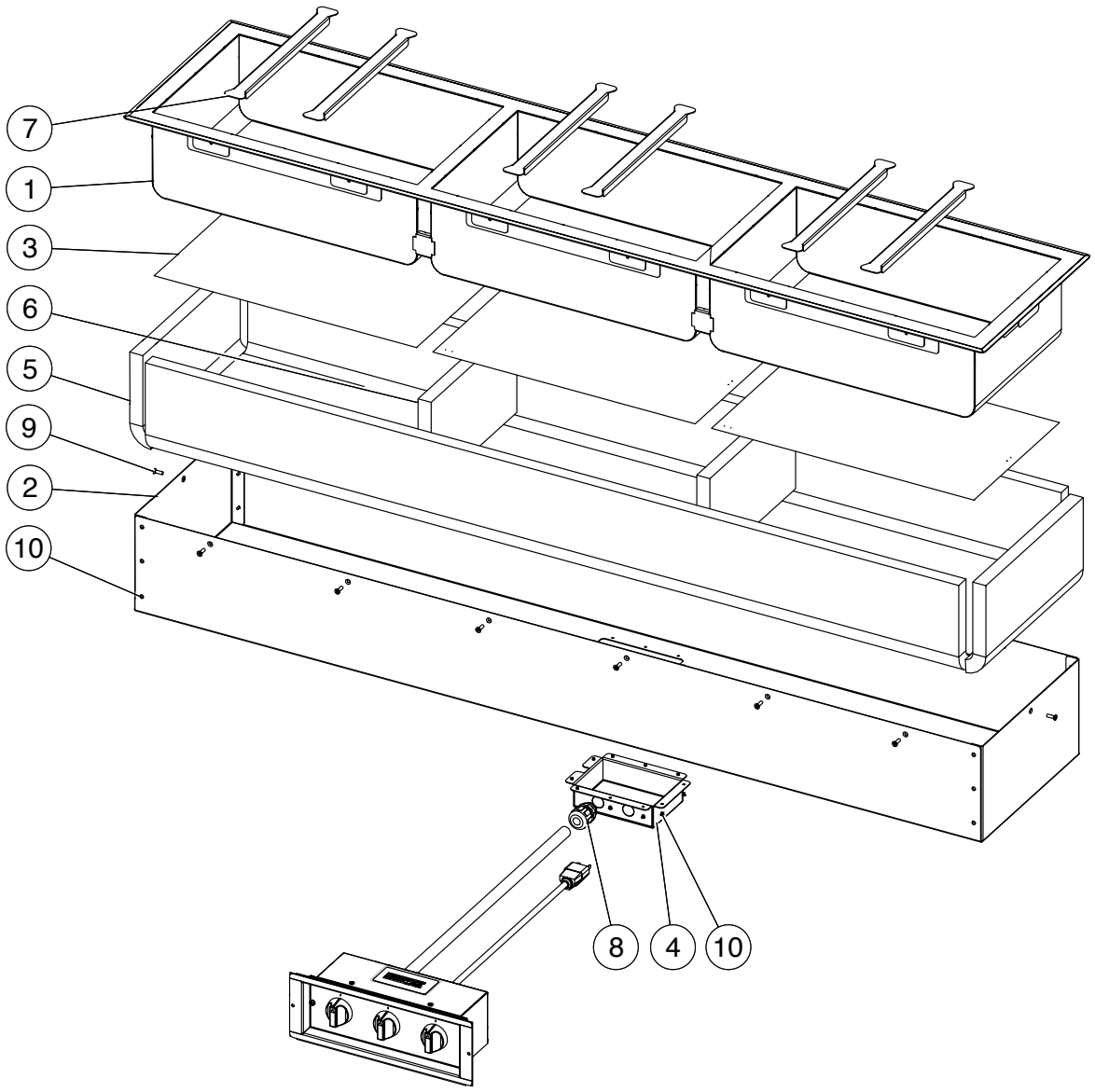

Item	Part	Description	Qty
1	5020436	WELDMENT, 3 WELL SLIMLINE	1
2	1018721	WRAPPER, 3 WELL, SLIMLINE	1
3	EL-36317	ELEMENT, FOIL HEATING PAD	3
4	5019797	CONNECTION BOX ASSEMBLY	1
5	1018720	INSULATION, WELL OUTSIDE	1
6	1018719	INSULATION, 11.875" x 6.38"	2

Item	Part	Description	Qty
7	11318	PAN DIVIDER, SHORT	6
8	BU-34606	BUSHING, STRAIGHT, STRAIN RELIEF	1
9	SC-22281	SCREW, M5 x 0.8 x 16mm FLAT	14
10	RI-38125	RIVET, SEALED, .125"	12
11	RI-2097	RIVET, #42 STAINLESS	13

Part numbers and drawings are subject to change without notice.

400-HW Control Service View

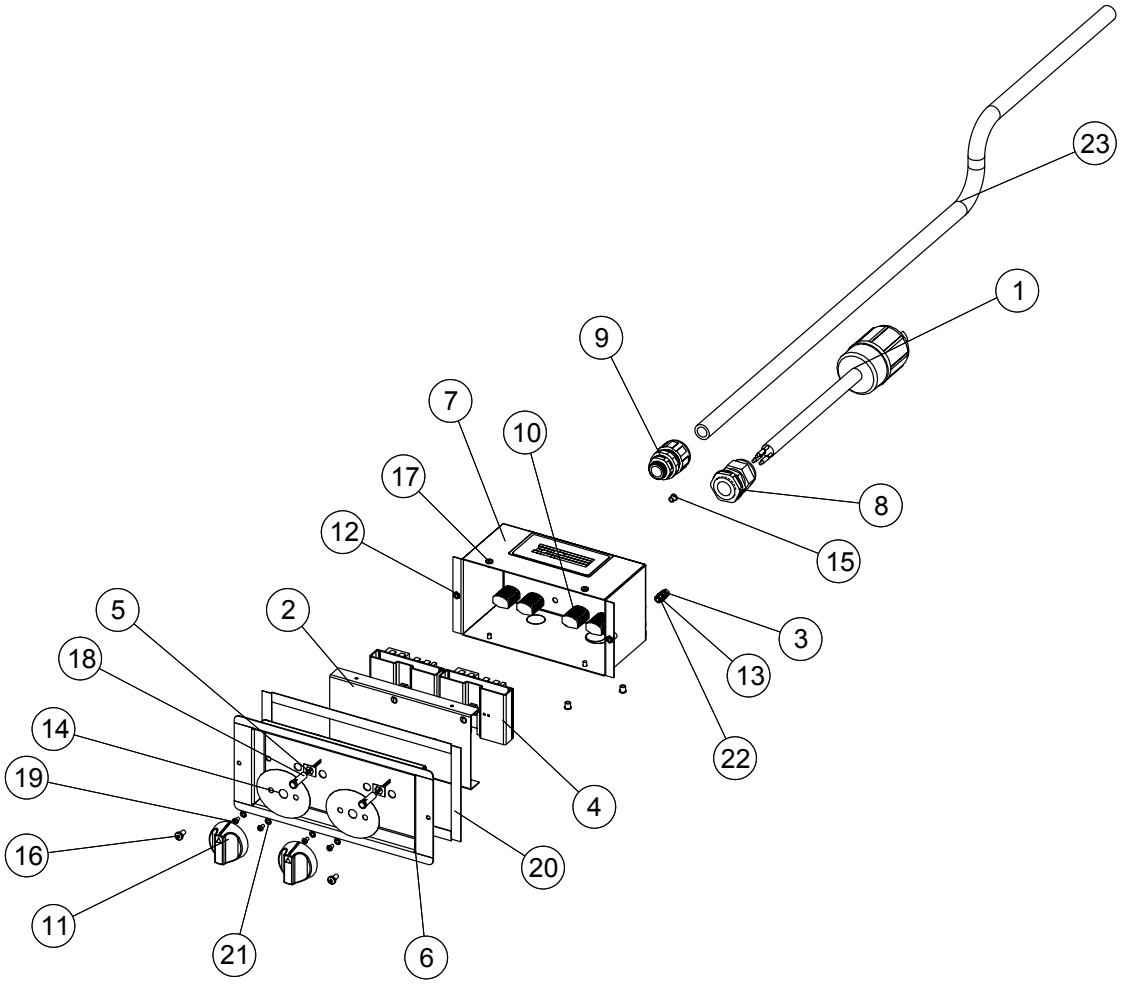

Item	Part	Description	Qty
1	CD-33366	CORDSET, 6' (1829mm), 125V, 30A, 10/3	1
	5014997*	CORDSET, BS 1363 FERRULE ASSB	1
	5016998	CORDSET, CH2-16P FERRULE ASSB	1
	CD-33840	CORDSET, 15A, 208-240V	1
	CD-3922	CORDSET, 16AWG, 3/C, INT'L HARM	1
2	1017288	PLATE, FACE	1
3	SC-22926	SCREW, M5 x 0.8 x 16mm HEX	1
4	CC-36859	CONTROL	2
5	CL-37245	CLIP, LIGHT MOUNTING	2
6	1015806	BOX, REMOTE, DECOR FACE 2 KNOB	1
7	1015724	SHELL, CONTROL POD, 2 KNOB	1
8	BU-33505	BUSHING, STRAIN RELIEF, 230V	1
9	BU-34606	BUSHING, STRAIN RELIEF, 120V, 208-240V	1
10	CR-34646	CONNECTOR-5 CONDUCTOR	4

*Use cord strain relief bushing BU-3964

Item	Part	Description	Qty
11	KN-36424	KNOB, T-STAT CONTROL	2
12	NU-23909	NUT, HEX INSERT M5	2
13	NU-36234	NUT, M5, KEPS	2
14	PE-36566	PANEL OVERLAY	2
15	PG-35411	PLUG, 1/4" HOLE	3
16	SC-22766	SCREW, M5 x 0.8 x 10mm PAN	2
17	SC-22271	SCREW, M4 x 0.7 x 6mm PAN	4
18	LI-37215	LIGHT, INDICATOR	2
19	SC-22500	SCREW 6-32 x 1/4" PAN HD	4
20	TA-24637	TAPE, VHB, FOAM, 1/2" WIDE	4
21	WS-2768	WASHER, #6, LOCK	4
22	WS-22295	WASHER, FLAT M5 S/S	1
23	TU-33178	CONDUIT, FLEX, 6 FT	1

Part numbers and drawings are subject to change without notice.

400-HW Exterior Service View

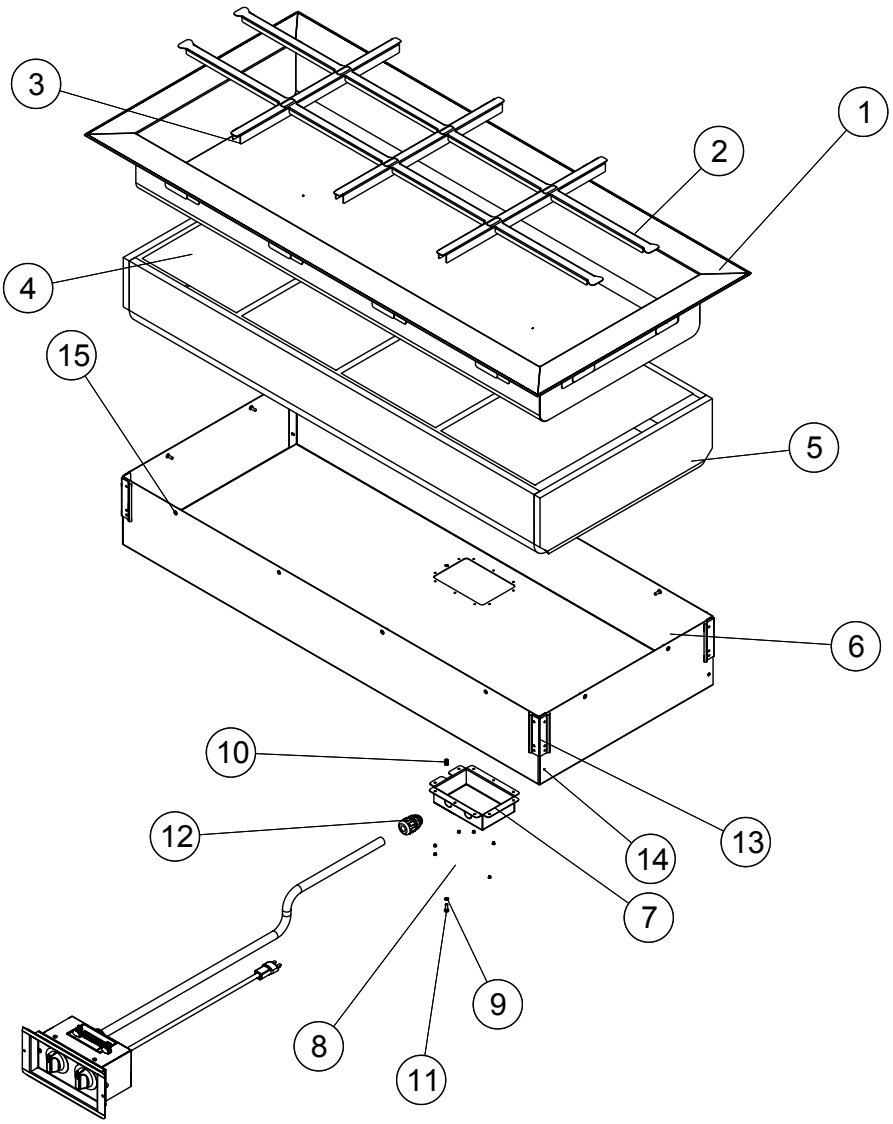

Item	Part	Description	Qty
1	5018600	WELL, D4, STD	1
	5018601	WELL, D6 STD	1
	5018602	WELL, D4 WIDE FLANGE	1
	5018603	WELL SPOT	1
2	11318	DIVIDER, PAN, SHORT	8
3	16019	DIVIDER, PAN	3
4	EL-36317	ELEMENT, FOIL HEATING PAD	4
5	IN-24588	INSULATION	1
6	1016162	WRAPPER, 4 WELL, 6" DEEP	1
	1016168	WRAPPER, 4 WELL, 4" DEEP	1

Item	Part	Description	Qty
7	1016034	BOX, CONNECTION	1
8	RI-2097	RIVET, #42 STAINLESS	10
9	WS-22301	WASHER, M5 SPLIT LOCK	1
10	NU-23909	NUT, HEX INSERT M5	1
11	SC-36973	SCREW, PAN PH, METRIC, M5	1
12	BU-34606	BUSHING, STRAIGHT, STRAIN RELIEF	1
13	1017049	BRACKET, STANDOFF, 230V ONLY	4
14	RI-27108	RIVET, SEALED	8
15	SC-22281	SCREW, M5 x 0.8 x 16mm FLAT	12

Part numbers and drawings are subject to change without notice.

400-HWI Control Service View

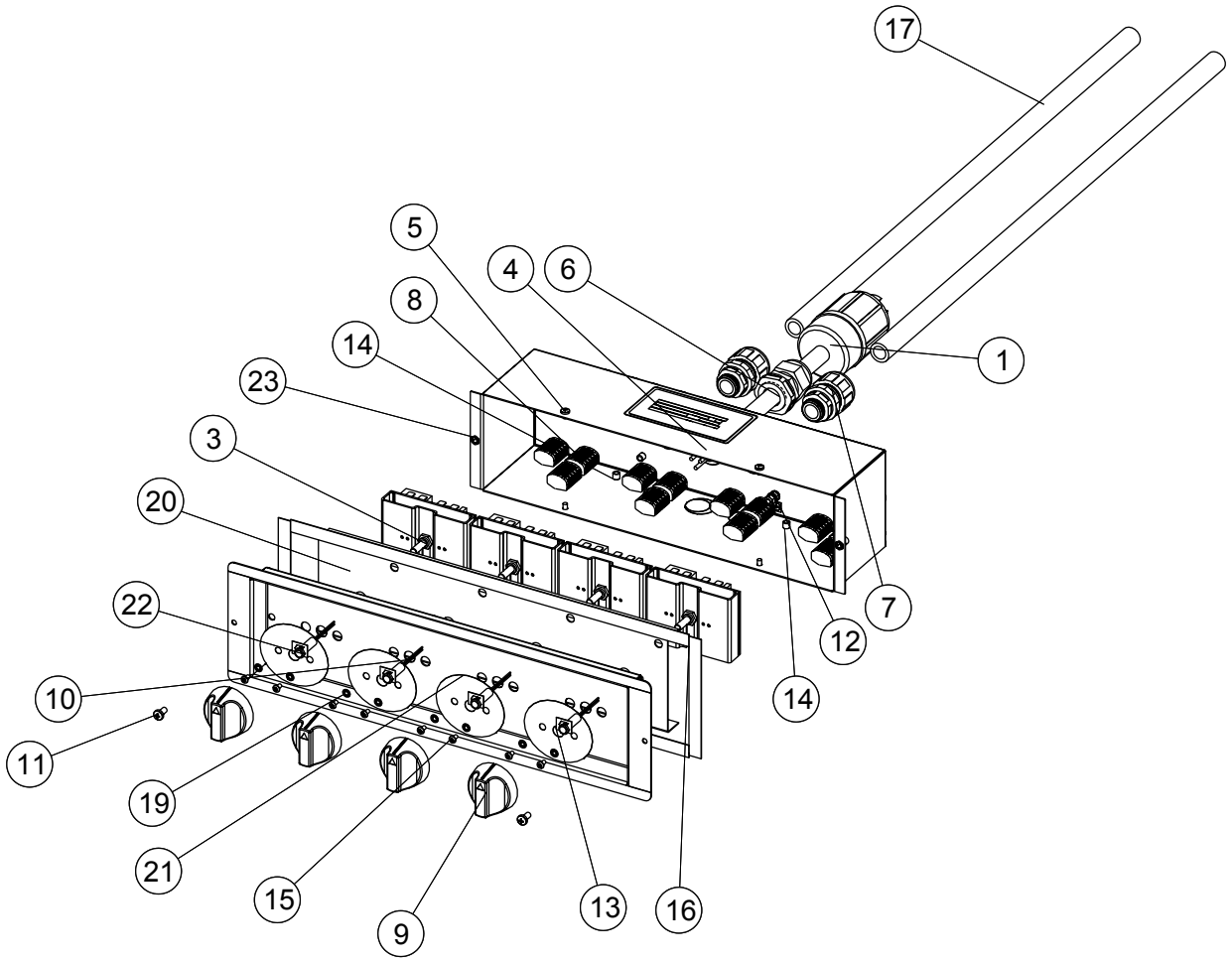

Item	Part	Description	Qty
1	5014997*	CORDSET, BS 1363 FERRULE ASSEMBLY	1
	5016998	CORDSET, CH2-16P FERRULE ASSEMBLY	1
	CD-33840	CORDSET, 15A, 208-240V	1
	CD-33366	CORDSET, 6' (1829mm), 125V, 30A, 10/3	1
	CD-3922	CORDSET, 16AWG, 3/C, INT'L HARM	1
3	CC-36859	CONTROL	4
4	1015726	SHELL, CONTROL POD, 4 KNOB	1
5	SC-22271	SCREW, M4 x 0.7 x 6mm PAN	4
6	BU-33505	BUSHING, STRAIN RELIEF, 230V	1
7	BU-34606	BUSHING, STRAIN RELIEF, 120V, 208-240V	2
8	CR-34646	CONNECTOR-5 CONDUCTOR	12
9	KN-36424	KNOB, T-STAT CONTROL	4
10	LI-37215	LIGHT, INDICATOR	4

Item	Part	Description	Qty
11	SC-22766	SCREW, M5 x 0.8 x 10mm PAN	2
12	NU-36234	NUT, M5, KEPS	2
13	PE-36566	PANEL OVERLAY	4
14	PG-35411	PLUG, 1/4" HOLE	2
15	SC-22500	SCREW 6-32 x 1/4" PAN HD	8
16	TA-24637	TAPE, VHB, FOAM, 1/2" WIDE	1
17	TU-33178	CONDUIT FLEX LIQUID TIGHT	2
19	WS-2768	WASHER, #6, LOCK	8
20	1017290	PLATE, FACE	1
21	1015807	BOX, REMOTE, DECOR FACE, 4 KNOB	1
22	CL-37245	CLIP, LIGHT MOUNTING	4
23	NU-23909	NUT, HEX INSERT M5	2

*Use cord strain relief bushing BU-3964

Part numbers and drawings are subject to change without notice.

400-HWI Exterior Service View

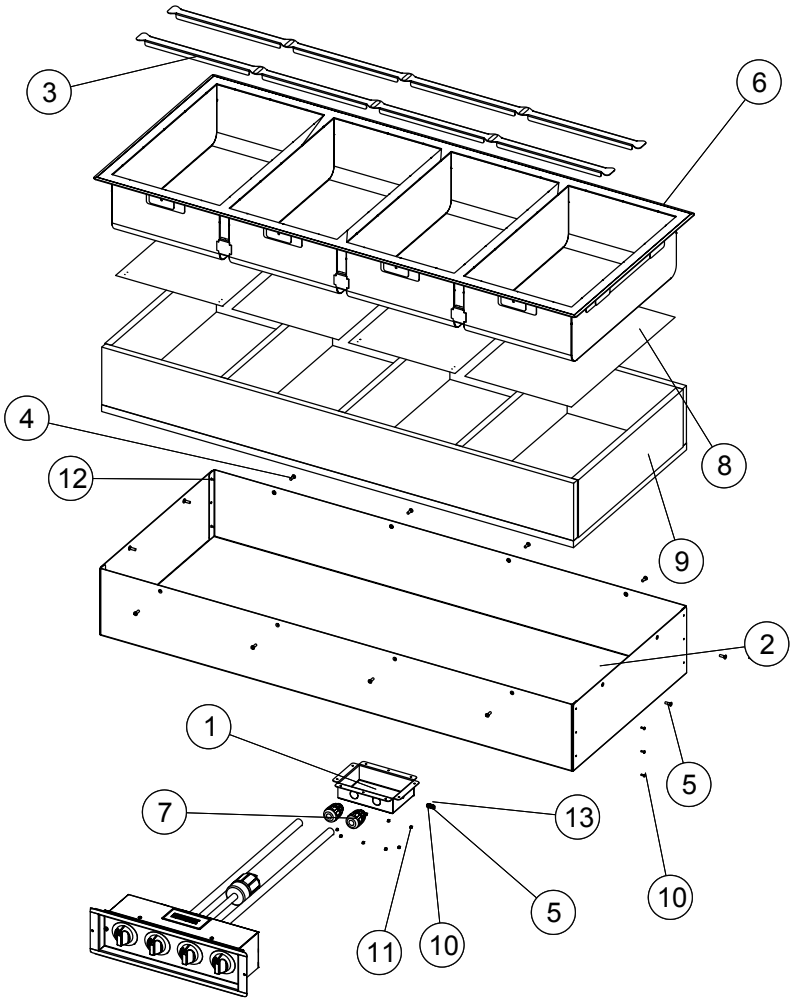

Item	Part	Description	Qty
1	1016034	BOX, CONNECTION	1
2	1016162	WRAPPER, 4 WELL, 6" DEEP	1
	1016168	WRAPPER, 4 WELL, 4" DEEP	1
3	11318	PAN DIVIDER, SHORT	8
4	SC-22281	SCREW, M5 x 0.8 x 16mm FLAT	12
5	SC-22926	SCREW, M5 x 0.8 x 16mm HEX	1
6	5017611	WELDMENT, D6, STD FLANGE	1
	5017616	WELDMENT, D4, STD FLANGE	1
	5017711	WELDMENT, D4, WIDE FLANGE	1

Item	Part	Description	Qty
	5017706	WELDMENT, D6, WIDE FLANGE	1
7	BU-34606	BUSHING, STRAIGHT, STRAIN RELIEF	2
8	EL-36317	ELEMENT, FOIL HEATING PAD	4
9	IN-24588	INSULATION	1
10	NU-36234	NUT, M5, KEPS	2
11	RI-2097	RIVET, #42 STAINLESS	10
12	RI-27108	RIVET, SEALED	12
13	WS-22295	WASHER, FLAT M5 S/S	1

Part numbers and drawings are subject to change without notice.

500-HW Control Service View

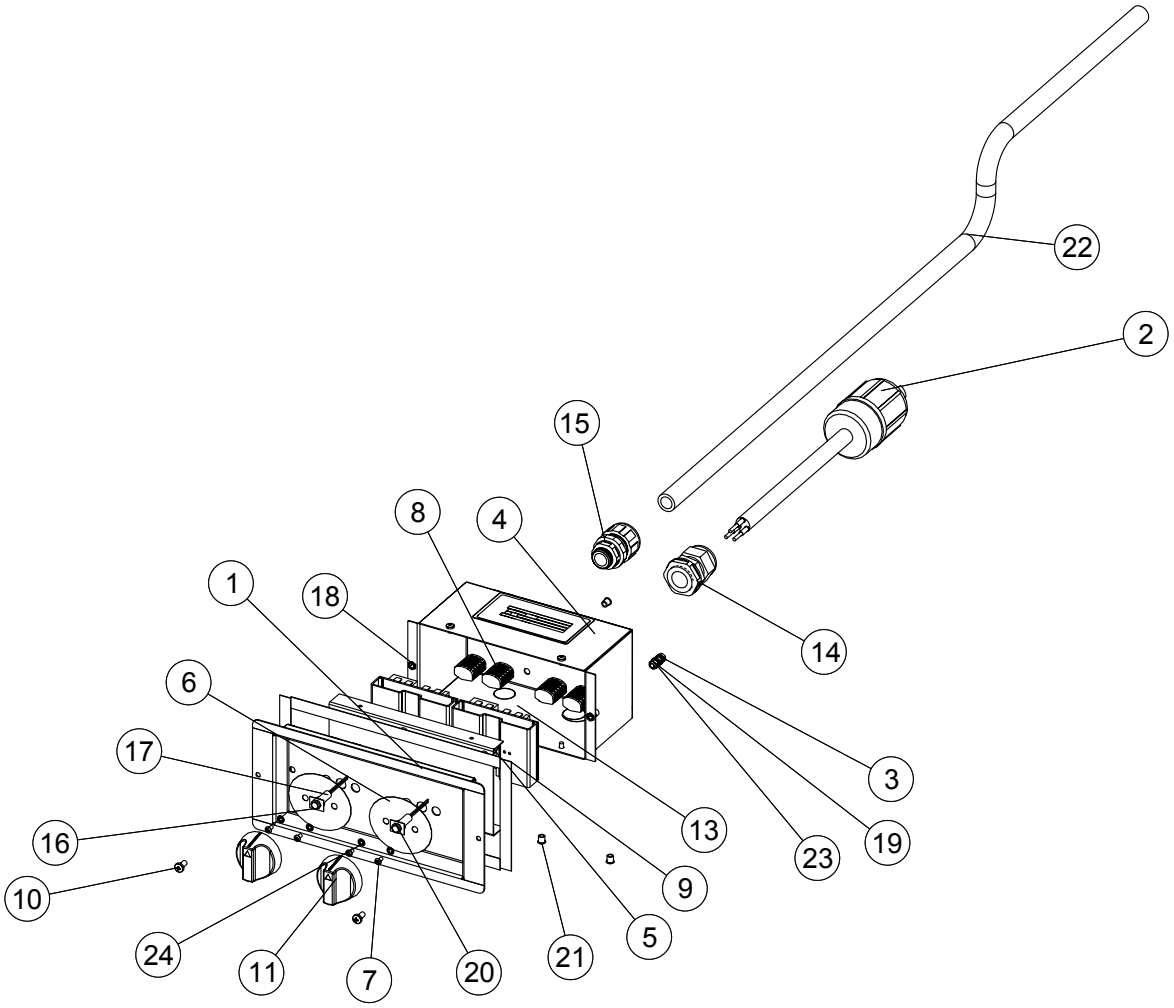

Item	Part	Description	Qty
1	1017288	PLATE, FACE	1
2	CD-33366	CORDSET, 6' (1829mm), 125V, 30A, 10/3	1
	5016998	CORDSET, CH2-16P, FERRULE ASSB	1
	CD-33840	CORDSET, 15A, 208-240V	1
	CD-3922	CORDSET, 16AWG, 3/C, INT'L HARM	1
	5014997*	CORDSET, BS 1363, FERRULE ASSB	1
3	SC-22926	SCREW, M5 x 0.8 x 16mm HEX	1
4	SC-22271	SCREW, M4 x 0.7 x 6mm PAN	4
5	CC-36859	CONTROL	2
6	1015806	BOX, REMOTE, DECOR FACE 2 KNOB	1
7	SC-22500	SCREW 6-32 x 1/4" PAN HD	4
8	CR-34646	CONNECTOR-5 CONDUCTOR	4
9	TA-24637	TAPE, VHB, FOAM, 1/2" WIDE	4
10	SC-22766	SCREW, M5 x 0.8 x 10mm PAN	2

Item	Part	Description	Qty
11	KN-36424	KNOB, T-STAT CONTROL	2
13	1015724	SHELL, CONTROL POD, 2 KNOB	1
14	BU-33505	BUSHING, STRAIN RELIEF, 230V	1
15	BU-34606	BUSHING, STRAIN RELIEF, 120V, 208-240V	1
16	CL-37245	CLIP, LIGHT MOUNTING	2
17	LI-37215	LIGHT, INDICATOR	2
18	NU-23909	NUT, HEX INSERT M5	2
19	NU-36234	NUT, M5, KEPS	2
20	PE-36566	PANEL OVERLAY	2
21	PG-35411	PLUG, 1/4" HOLE	3
22	TU-33178	CONDUIT, FLEXIBLE, 6 FT	1
23	WS-22295	WASHER, FLAT M5 S/S	1
24	WS-2768	WASHER, #6, LOCK	4

*Use cord strain relief bushing BU-3964

Part numbers and drawings are subject to change without notice.

500-HW Exterior Service View

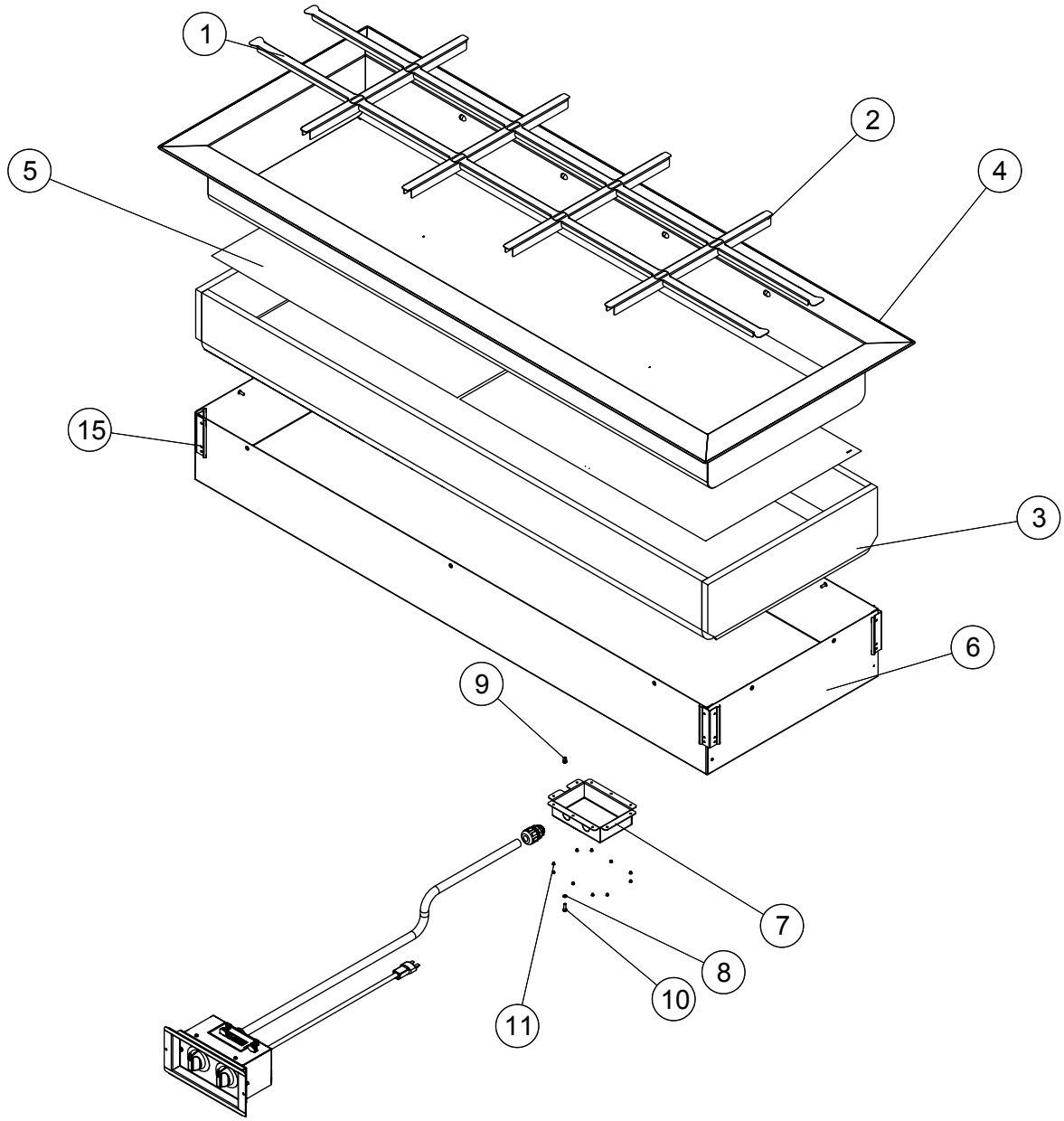

Item	Part	Description	Qty
1	11318	PAN DIVIDER, SHORT	10
2	16019	PAN DIVIDER	4
3	IN-24588	INSULATION	1
4	5018546	WELL, D4, STD	1
	5018547	WELL, D6, WIDE FLANGE	1
	5018548	WELL, D4 WIDE FLANGE	1
	5018549	WELL, D6 WIDE FLANGE	1
5	EL-37233	ELEMENT, HEATING PAD	2
6	1015717	WRAPPER, 5 WELL, 6" DEEP	1

Item	Part	Description	Qty
	1016196	WRAPPER, 5 WELL, 4" DEEP	1
7	1016034	BOX, CONNECTION	1
8	WS-22301	WASHER, M5 SPLIT LOCK	1
9	NU-23909	NUT, HEX INSERT M5	1
10	SC-36973	SCREW, PAN PH, METRIC, M5	1
11	RI-2097	RIVET, #42 STAINLESS	10
15	1017049	BRACKET, STANDOFF, 230V ONLY	4

Part numbers and drawings are subject to change without notice.

500-HWI Control Service View

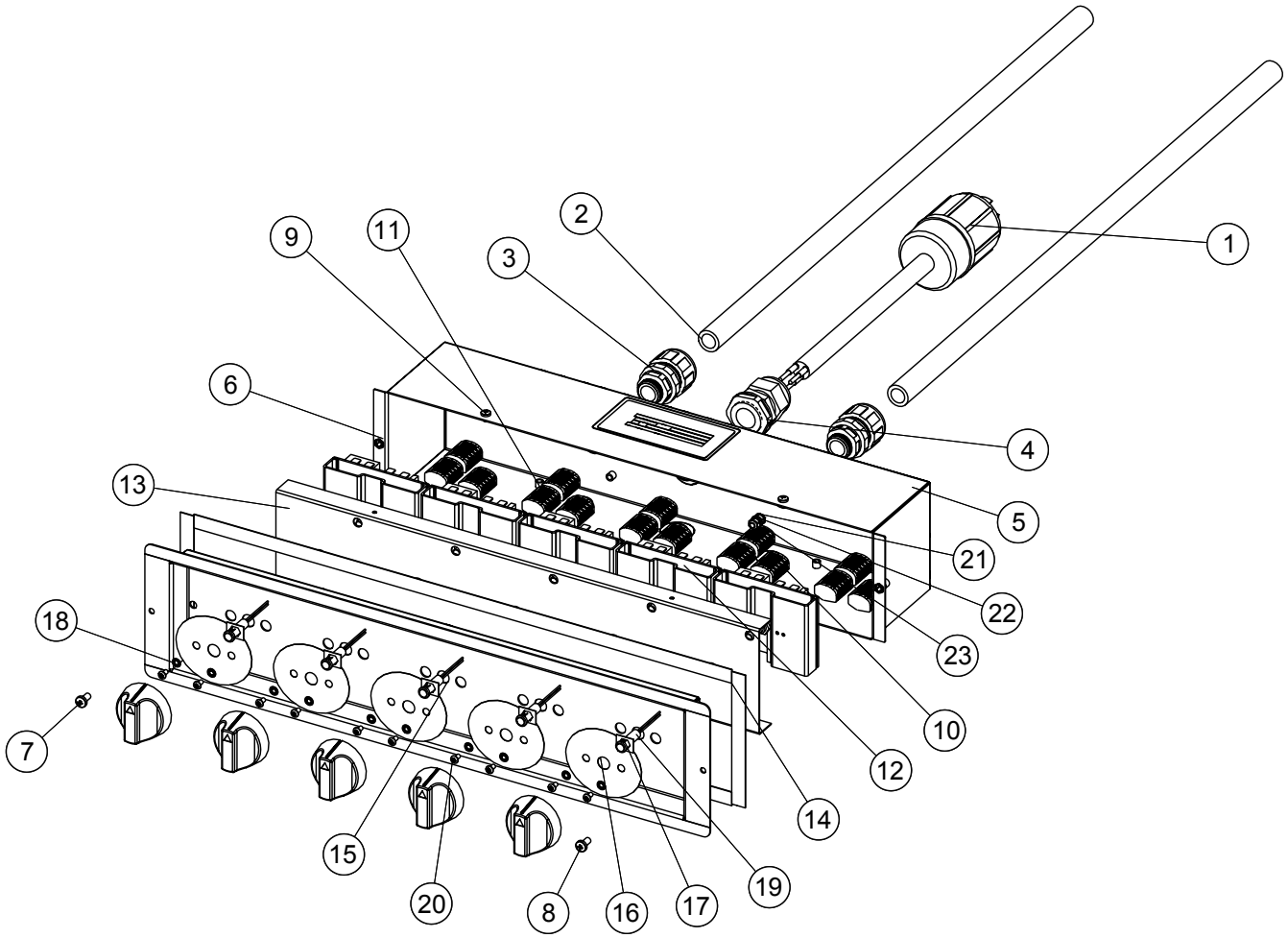

Item	Part	Description	Qty
1	CD-33366	CORDSET, 6' (1829mm), 125V, 30A, 10/3	1
	CD-33840	CORDSET 15A 208-240V	1
	5014997*	CORDSET, BS 1363, FERRULE ASSB	1
	5016998	CORDSET, CH2-16P, FERRULE ASSB	1
	CD-3922	CORDSET, 16AWG, 3/C, INT'L HARM	1
2	TU-33178	CONDUIT, FLEXIBLE	2
3	BU-34606	BUSHING, STRAIN RELIEF	2
4	BU-33505	BUSHING, STRAIN RELIEF, 230V	1
5	1015727	SHELL, CONTROL POD, 5 KNOB	1
6	NU-23909	NUT, HEX INSERT M5	2
7	SC-22766	SCREW, M5 x 0.8 x 10mm PAN	1
8	SC-22766	SCREW, M5 x 0.8 x 10mm PAN	1
9	SC-22271	SCREW, M4 x 0.7 x 6mm PAN	4
10	CR-34646	CONNECTOR-5 CONDUCTOR	14

Item	Part	Description	Qty
11	PG-35411	PLUG, 1/4" HOLE	3
12	CC-36859	CONTROL	5
13	1017291	PLATE, FACE	1
14	TA-24637	TAPE, VHB, FOAM, 1/2" WIDE	1
15	1015808	BOX, REMOTE, DECOR FACE, 5 KNOB	1
16	PE-36566	PANEL OVERLAY	5
17	CL-37245	CLIP, LIGHT MOUNTING	5
18	WS-2768	WASHER, #6, LOCK	10
19	LI-37215	LIGHT, INDICATOR	5
20	SC-22500	SCREW, 6-32 x 1/4", PAN HD	10
21	SC-22926	SCREW, M5 x 0.8 x 16mm HEX	1
22	NU-36234	NUT, M5, KEPS	2
23	WS-22295	WASHER, FLAT M5 S/S	1

*Use cord strain relief bushing BU-3964

Part numbers and drawings are subject to change without notice.

500-HWI Exterior Service View

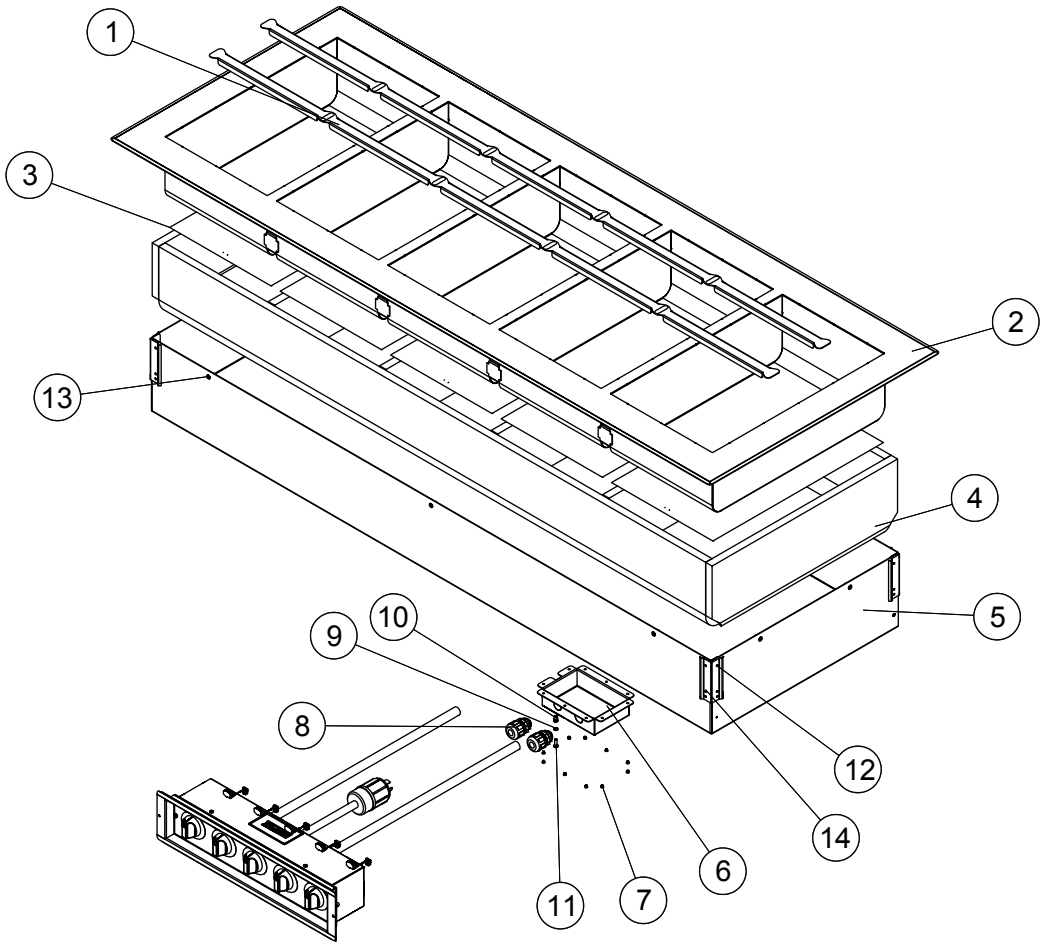

Item	Part	Description	Qty
1	11318	PAN DIVIDER, SHORT	10
2	5017707	WELDMENT, D6, WIDE FLANGE	1
	5017712	WELDMENT, D4, WIDE FLANGE	1
	5017270	WELDMENT, D6 STD FLANGE	1
	5017617	WELDMENT, D4 STD FLANGE	1
3	EL-36317	ELEMENT, FOIL HEATING PAD	5
4	IN-24588	INSULATION, 33.4" x 78"	1
5	1015717	WRAPPER, 5 WELL, 6" DEEP	1
	1016196	WRAPPER, 5 WELL, 4" DEEP	1
6	1016034	BOX, CONNECTION	1

Item	Part	Description	Qty
7	RI-2097	RIVET, #42 STAINLESS	10
8	BU-34606	BUSHING, STRAIN RELIEF	2
9	WS-22301	WASHER, M5 SPLIT LOCK	1
10	NU-23909	NUT, HEX INSERT M5	1
11	SC-36973	SCREW, PAN PH, METRIC, M5	1
12	RI-27108	RIVET, SEALED	12
13	SC-22281	SCREW, M5 x 0.8 x 16mm FLAT	8
14	1017049	BRACKET, STANDOFF, 230V ONLY	4

Part numbers and drawings are subject to change without notice.

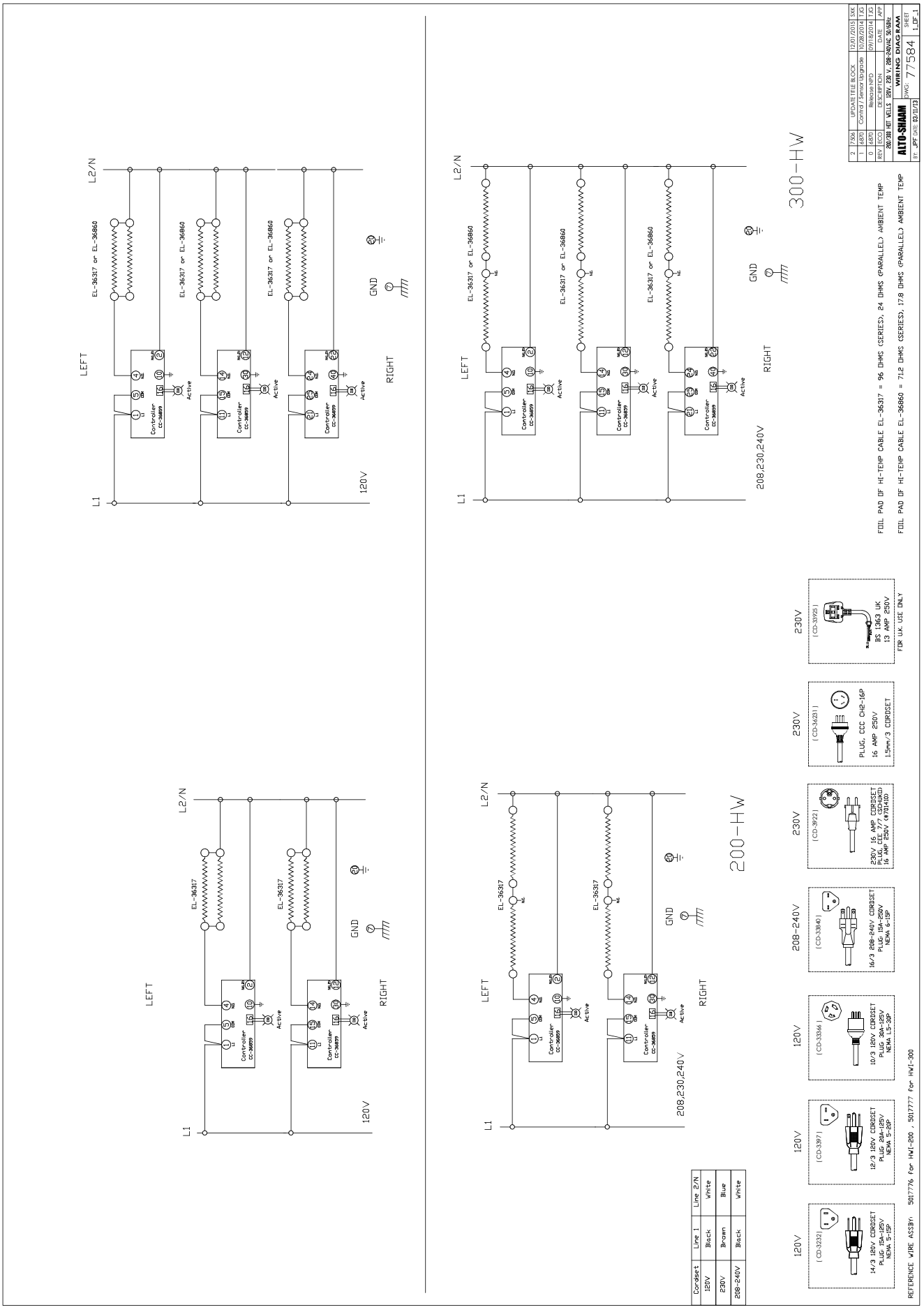
L2/N
L1
LEFT
RIGHT
GND
120V
208,230,240V
EL-36317 or EL-36860
EL-36317
Controller CC-36899
Active
300-HW
200-HW
FOIL PAD OF HI-TEMP CABLE EL-36317 = 96 OHMS (SERIES), 24 OHMS (PARALLEL) AMBIENT TEMP
FOIL PAD OF HI-TEMP CABLE EL-36860 = 71.2 OHMS (SERIES), 17.8 OHMS (PARALLEL) AMBIENT TEMP
FOR UK USE ONLY
BS 1363 UK
13 AMP 250V
PLUG, CCC CH2-16P
16 AMP 250V
1.5mm/3 CORDSET
230V 16 AMP CORDSET
PLUG CEE 7/7 (SCHUKO)
16 AMP 250V (EUROPEAN)
16/3 208-240V CORDSET
PLUG 15A-250V
NEMA 6-15P
10/3 120V CORDSET
PLUG 30A-125V
NEMA L5-30P
12/3 120V CORDSET
PLUG 20A-125V
NEMA 5-20P
14/3 120V CORDSET
PLUG 15A-125V
NEMA 5-15P
Cordset | Line 1 | Line 2/N
120V | Black | White
230V | Brown | Blue
208-240V | Black | White
REFERENCE WIRE ASSBY. 5017776 for HWI-200 . 5017777 for HWI-300
REV | ECO | DESCRIPTION | DATE | APP
0 | 6870 | Release MFD | 09/18/2014 | AS
1 | 6870 | Control Sensor Upgrade | 10/28/2014 | AS
2 | 7506 | UPDATE TITLE BLOCK | 12/01/2015 | SSK
200/208 HOT WELLS 208-240VAC 60HZ
300 HOT WELLS 208-240VAC 60HZ
ALTO-SHAAM
WIRING DIAGRAM
DWG: 77584
SHEET 1_DF_1
BY: JPF DATE: 03/11/13

Refer to wire diagram sent with appliance for most current version

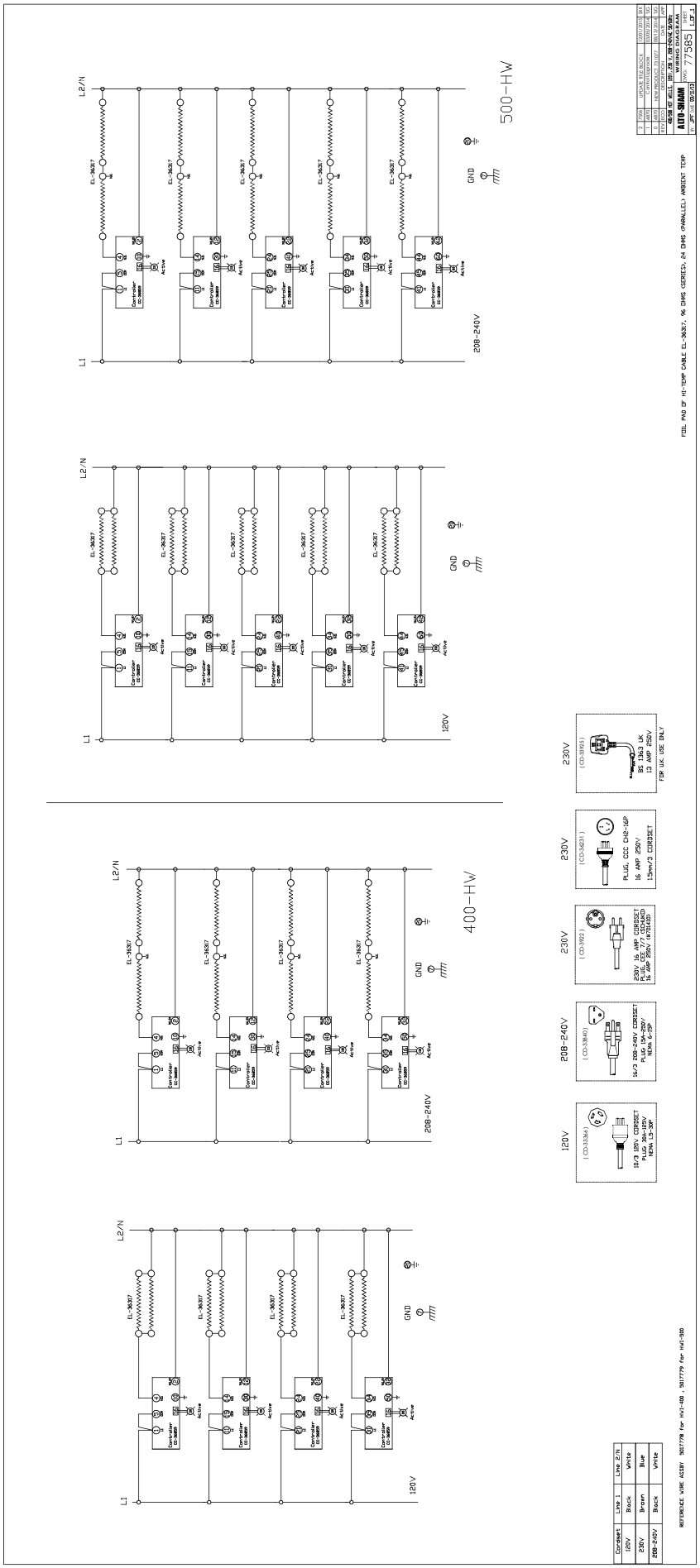

Limited Warranty

Alto-Shaam, Inc. warrants to the original purchaser only that any original part that is found to be defective in material or workmanship will, at Alto-Shaam's option, subject to provisions hereinafter stated, be replaced with a new or rebuilt part.

The original parts warranty period is as follows:

For the refrigeration compressor on Alto-Shaam Quickchillers™, five (5) years from the date of installation of appliance.

For the heating element on Halo Heat® cooking and holding ovens, as long as the original purchaser owns the oven. This excludes holding only equipment.

For all other original parts, one (1) year from the date of installation of appliance or fifteen (15) months from the shipping date, whichever occurs first.

The labor warranty period is one (1) year from the date of installation or fifteen (15) months from the shipping date, whichever occurs first.

Alto-Shaam will bear normal labor charges performed during standard business hours, excluding overtime, holiday rates or any additional fees.

To be valid, a warranty claim must be asserted during the applicable warranty period. This warranty is not transferable.

This warranty does not apply to:

1. Calibration.
2. Replacement of light bulbs, door gaskets, and/or the replacement of glass due to damage of any kind.
3. Equipment damage caused by accident, shipping, improper installation or alteration.
4. Equipment used under conditions of abuse, misuse, carelessness or abnormal conditions, including but not limited to, equipment subjected to harsh or inappropriate chemicals, including but not limited to, compounds containing chloride or quaternary salts, poor water quality, or equipment with missing or altered serial numbers.
5. Damage incurred as a direct result of poor water quality, inadequate maintenance of steam generators and/or surfaces affected by water quality. Water quality and required maintenance of steam generating equipment is the responsibility of the owner/operator.
6. Damage caused by use of any cleaning agent other than Alto-Shaam's Combitherm® Cleaner, including but not limited to damage due to chlorine or other harmful chemicals. **Use of Alto-Shaam's Combitherm® Cleaner on Combitherm® ovens is highly recommended.**
7. Any losses or damage resulting from malfunction, including loss of product, food product, revenue, or consequential or incidental damages of any kind.
8. Equipment modified in any manner from original model, substitution of parts other than factory authorized parts, removal of any parts including legs, or addition of any parts.

This warranty is exclusive and is in lieu of all other warranties, express or implied, including the implied warranties of merchantability and fitness for a particular purpose. In no event shall Alto-Shaam be liable for loss of use, loss of revenue or profit, or loss of product, or for any indirect, special, incidental, or consequential damages. No person except an officer of Alto-Shaam, Inc. is authorized to modify this warranty or to incur on behalf of Alto-Shaam any other obligation or liability in connection with Alto-Shaam equipment.

Effective November 1, 2012

W164 N9221 Water Street • P.O. Box 450
Menomonee Falls, Wisconsin 53052-0450 U.S.A.

PHONE: 262.251.3800 • 800.558.8744 U.S.A. / CANADA
FAX: 262.251.7067 • 800.329.8744 U.S.A. ONLY
www.alto-shaam.com

Printed in the U.S.A